UK SCAN 66

UK - ASSEMBLY AND INSTRUCTIONS MANUAL

SCAN 66

ASSEMBLY AND INSTRUCTIONS MANUAL SCAN 66

UK SCAN 66

CONGRATULATIONS ON YOUR NEW SCAN WOOD-BURNING STOVE

You have purchased a product by one of Europe's leading manufacturers of wood-burning stoves, and we are sure that you will have years of pleasure from your purchase.

To make the best possible use of your stove, it is important that you follow our advice and instructions. Read through this Assembly and Instruction Manual carefully before you start to assemble your stove.

SCAN 66 -1
WALLMODELL

SCAN 66-2
PEDESTAL BASE

SCAN 66-4
PLINTH BASE

SCAN 66-5
S-CURVE BASE

TABLE OF CONTENTS

TECHNICAL DATA 4

Installation 4
Safety 4
The Clean Air Act 1993 and Smoke Control Areas 4
CO monitor 4
Technical data and dimensions 6
Type plate 8
Product registration number 8
Dimension sketch 9
Minimum distances 10

ASSEMBLY 12

Tools needed for mounting of the stove 12
Contents of packaging 12
Loose parts 12
Additional accessories 12
Disposal of packaging 13
Room requirements 13
Existing chimney and pre-fabricated element chimney 13
Connection between stove and steel chimney 13
Requirements for chimney 14
Requirements for insulated chimney 14
Fresh air intake 15
Closed combustion system 15
Firewood storage 16
Safety distance 16
Opening of the door 17
Fitting the flue connection piece 18
Height adjustment of stove 20
Mounting of wall-hung model 21
Mounting of the burn chamber on the pedestal base 25
Mounting of external air supply on the pedestal base 25
Mounting of the burn chamber on the plinth base 26
Mounting of external air supply on the plinth base 26
Mounting of the burn chamber on the S-base 27
Mounting of external air supply on the S-base 27
Mounting of combustion chamber 28
Load-bearing foundation 30
Floor plate 30

INSTRUCTIONS FOR USE 31

CB-technology (Clean Burn) 31
Primary air 31
Secondary air 31
Baffle plates 31
Ash container 31
Refueling on to a low fire bed 32
Operation with door left open 32
Dampers left open 32

IINSTRUCTIONS FOR HEATING 33

First heating and paint hardening 33
Environmentally-friendly firing 33
Lighting 33
Continuous operation 34
Warning about over-firing 34
Using the stove in various weather conditions 34
Firing in the spring or autumn 34
The function of the chimney 34
Chimney fire 35
General notes 35

HANDLING OF THE FUEL 36

Selecting wood/fuel 36
Preparation 36
Storing 36
Moisture 36
Use of the following as fuel is illegal 36
Calorific value of the wood 36

MAINTAINANCE 37

Cleaning the log guard 39
Cleaning the glass 39
Disposal of stove parts 39

TROUBLESHOOTING 40

WARRANTY 42

TECHNICAL DATA

INSTALLATION

- The house owner is responsible for ensuring that installation and assembly are in accordance with national and local building regulations as well as the information provided in this Assembly and Instruction Manual
- When you install any kind of fireplace or stove, you must inform the local building and housing authorities. In addition you are obliged to have the installation inspected and approved by a local chimney sweep prior to commissioning
- To ensure best-possible functionality and safety for your installation, we advise you to call a professional fitter. Your Scan Dealer will be able to recommend a qualified fitter in your area. For information on Scan Dealers, please go to www.scan-stoves.com

SAFETY

Any changes made to the product by the dealer, fitter or user could result in the product and safety functions not functioning as intended. The same applies to the fitting of accessories or extra equipment not supplied by Scan A/S. This could also be the case if parts that are necessary for the operation and safety of the stove are dismantled or removed.

THE CLEAN AIR ACT 1993 AND SMOKE CONTROL AREAS

Under the Clean Air Act local authorities may declare the whole or part of the district of the authority to be a smoke control area. It is an offence to emit smoke from a chimney of a building, from a furnace or from any fixed boiler if located in a designated smoke control area. It is also an offence to acquire an "unauthorized fuel" for use within a smoke control area unless it is used in an "exempt" appliance ("exempted" from the controls which generally apply in the smoke control area).

The Secretary of State for Environment, Food and Rural Affairs has powers under the Act to authorize smokeless fuels or exempt appliances for use in smoke control areas in England. In Scotland and Wales this power rests with Ministers in the devolved administrations for those countries. Separate legislation, the Clean Air (Northern Ireland) Order 1981, applies in Northern Ireland. Therefore it is a requirement that fuels burnt or obtained for use in smoke control areas have been "authorized" in Regulations and that appliances used to burn solid fuel in those areas (other than "authorized" fuels) have been exempted by an Order made and signed by the Secretary of State or Minister in the devolved administrations.

- Further information on the requirements of the Clean Air Act can be found here: www.smokecontrol.defra.gov.uk
- Your local authority is responsible for implementing the Clean Air Act 1993 including designation and supervision of smoke control areas and you can contact them for details of Clean Air Act requirements"
- The secondary air valve has been modified, so that is does not close completely but has an opening corresponding to the position used at the lowest emission test
- You can use any type of wood as fuel
- This stove has been recommended as suitable for use in smoke control areas when burning wood

CO MONITOR

An approved CO monitor should be fitted in the same room as the appliance.

PLEASE NOTE!

YOU GET THE BEST USE OF THE STOVE BY USING A TOP-DOWN LIGHTING METHOD

SEE "INSTRUCTIONS FOR HEATING"

TECHNICAL PARAMETERS FOR SOLID FUEL LOCAL SPACE HEATERS
REG. (EU) 2015/1185, REG. (EU) 2015/1186

Model identifier(s): Scan 66	
Indirect heating functionality	No
Direct heat output…(kW)	5.2
Indirect heat output…(kW)	N.A

Fuel	Preferred fuel (Only one)	Model identifier(s)	Emissions from space heating at nominal heat output			
			PM	OGC	CO	NO_x
			[X] mg/Nm_3 (13 % O_2)			
Wood logs with moisture content ≤ 25%	Yes	No	28	34	428	86
Compressed wood with moisture content < 12%	No	No				
Other woody biomass	No	No				
Anthracite and dry steam coal	No	No				
Hard coke	No	No				
Low temperature coke	No	No				
Bituminous coal	No	No				
Lignite briquettes	No	No				
Peat briquettes	No	No				
Blended fossil fuel briquettes	No	No				
Other fossil fuel	No	No				
Blended biomass and fossil fuel briquettes	No	No				
Other blend of biomass and solid fuel	No	No				

Characteristics when operating with the preferred fuel	
Seasonal space heating energy efficiency η_s [%]	68
Energy Efficiency Class	A
Energy Efficiency Index (EEI)	103

Item	Symbol	Value	Unit
Heat output			
Nominal heat output	P_{nom}	5.2	kW
Minimum heat output (indicative)	P_{min}	N.A.	kW
Auxiliary electricity consumption			
At nominal heat output	el_{max}	x,xxx	kW
At minimum heat output	el_{min}	x,xxx	kW
In standby mode	el_{SB}	x,xxx	kW
Permanent pilot flame power requirement			
Pilot flame power requirement (if applicable)	P_{pilot}	N.A.	kW

Item	Symbol	Value	Unit
Use efficiency (NCV as received)			
Useful efficiency at nominal heat output	$\eta_{th,nom}$	78	%
Useful efficiency at minimum heat output (indicative)	$\eta_{th,min}$	N.A.	%
Type of heat output/room temperature control (select one)			
single stage heat output, no room temperature control		[yes/no]	
two or more manual stages, no room temperature control		[yes/no]	Yes
with mechanic thermostat room temperature control		[yes/no]	
with electronic room temperature control		[yes/no]	
with electronic room temperature control plus day timer		[yes/no]	
with electronic room temperature control plus week timer		[yes/no]	
Other control options (multiple selections possible)			
room temperature control, with presence detection		[yes/no]	
room temperature control, with open window detection		[yes/no]	
with distance control option		[yes/no]	

Contact details	Name and address of the supplier:
	Lena Bergqvist, (COO) Jøtul AS

Test in compliance with EN 16510			
	Classification of appliance	Type BF	
P_{nom}	Nominel heat output	5.2	kW
N_{nom}	Energy efficiency at nominel heat output	78	%
$N_{s\ nom}$	Seasonal space heating energy efficiency at nominel heat output	68	%
EEI	Energy efficiency index	103	
	Energy efficiency class	A	
	Fuel	Wood*	
	Fuel length, maximum	330	mm
$M_{h\ nom}$	Fuel consumption	1.7	kg/h
	Amount of fuel	1.3	kg
	Amount of fuel, maximum	1.6	kg
CO_{nom}	CO emission at 13% O_2 at nominel heat output	0.034 428	% mg/Nm^3
$NO_{x\ nom}$	NO_x emission at 13% O_2 at nominel heat output	86	mg/Nm^3
OGC_{nom}	OGC emission at 13% O_2 at nominel heat output	34	mg/Nm^3
PM_{nom}	Dust emission at 13% O_2 at nominel heat output	28	mg/Nm^3
p_{nom}	Flue draught at nominel heat output	12	Pa
	Recommended sub-pressure in the connecting piece	18-20	Pa
	Required combustion air supply	15.3	m^3/h
$T_{fg\ nom}$	Flue gas temperature at nominal heat output	298	°C
$T_{s\ nom}$	Temperature in the flue connecting piece at nominal heat output	371	°C
T class	Chimney designation	T400	
$Ø_{f.g\ nom}$	Flue gas mass flow at nominal heat output	5.3	g/sec
V_h	Standing air loss	0	m^3/h
	Leakage before testing at a gauge pressure of 5 Pa	5.7	m^3/h
	Leakage before testing at a gauge pressure of 10 Pa	8.6	m^3/h
	Leakage before testing at a gauge pressure of 15 Pa	10.9	m^3/h
CON/INT	Continuous operation (CON)/Intermittent operation (INT)	INT**	
	Reaction to fire classification	A1	

* Use only recommended fuels - designation I.

** Intermittent operation in this context means normal use of a wood-burning stove. In other words, you should let the fire die down until only the embers are left before refueling.

Basic technical data			
	Materials	Stainless steel Cast iron Vermiculite Glass	
	Surface treatment	Senotherm	
d_{out1}	Connecting piece int. diameter for outside flue pipe	144	mm
d_{out2}	Connecting piece ext. diameter for outside flue pipe	148	mm
d_{out3}	Connecting piece int. diameter for inside flue pipe	157	mm
d_{out4}	Connecting piece ext. diameter for inside flue pipe	161	mm
	Fresh air connection piece external diameter	100	mm
L	Overall dimensions (length)	387/337	mm
H	Overall dimensions (height)	630/946,5/943	mm
W	Overall dimensions (width)	534/1037	mm
m	Mass (weight) - Scan 66-1/66-2, 66-4/66-5	approx. 90/100/108	kg
m_{chim}	Maximum load of a chimney the stove may carry	120	kg

Minimum distances to combustible materials (uninsulated/insulated flue pipe)			
d_R	Back	175/100	mm
d_S	Sides	325	mm
$d_{S(C)}$	Sides - corner distance	150/100	mm
d_C	Ceiling	750	mm
d_P	Front	950	mm
d_F	Front to the bottom front radiation area	0	mm
d_L	Front to the side front radiation area	0	mm
d_B	Below the bottom (not regarding feet)	0	mm
d_{B1}	Bottom edge of door to floor	310	mm
d_{non}	Minimum distances to non-combustible walls	50	mm

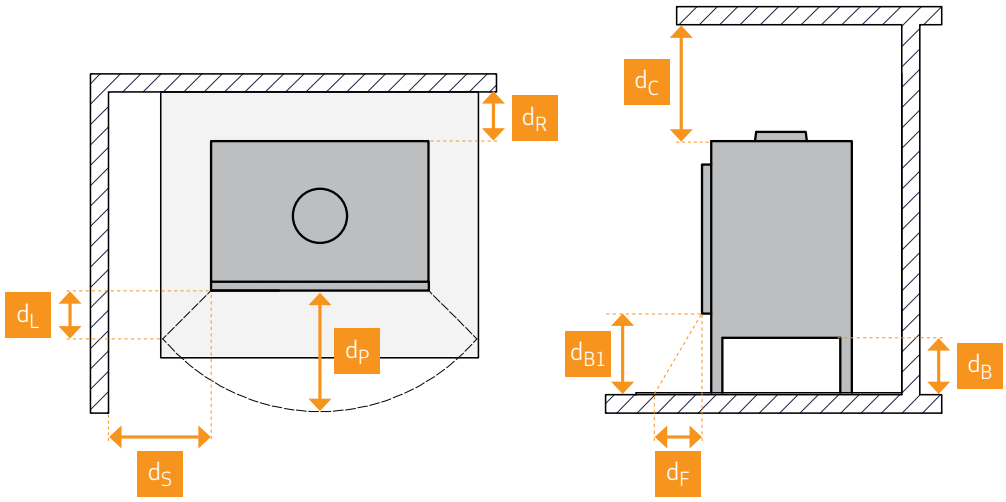

This stove is produced in accordance with type approval for the product, which also covers the product's Assembly and Instruction Manual. Read and follow the user operating instructions carefully.

The Declaration of Performance (DoP) is available from www.scan-stoves.com

TYPE PLATE

All Scan wood-burning stoves are fitted with a type plate that specifies the approval standards and the distance to flammable materials.

The type plate is located at the rear of the stove.

Type plate

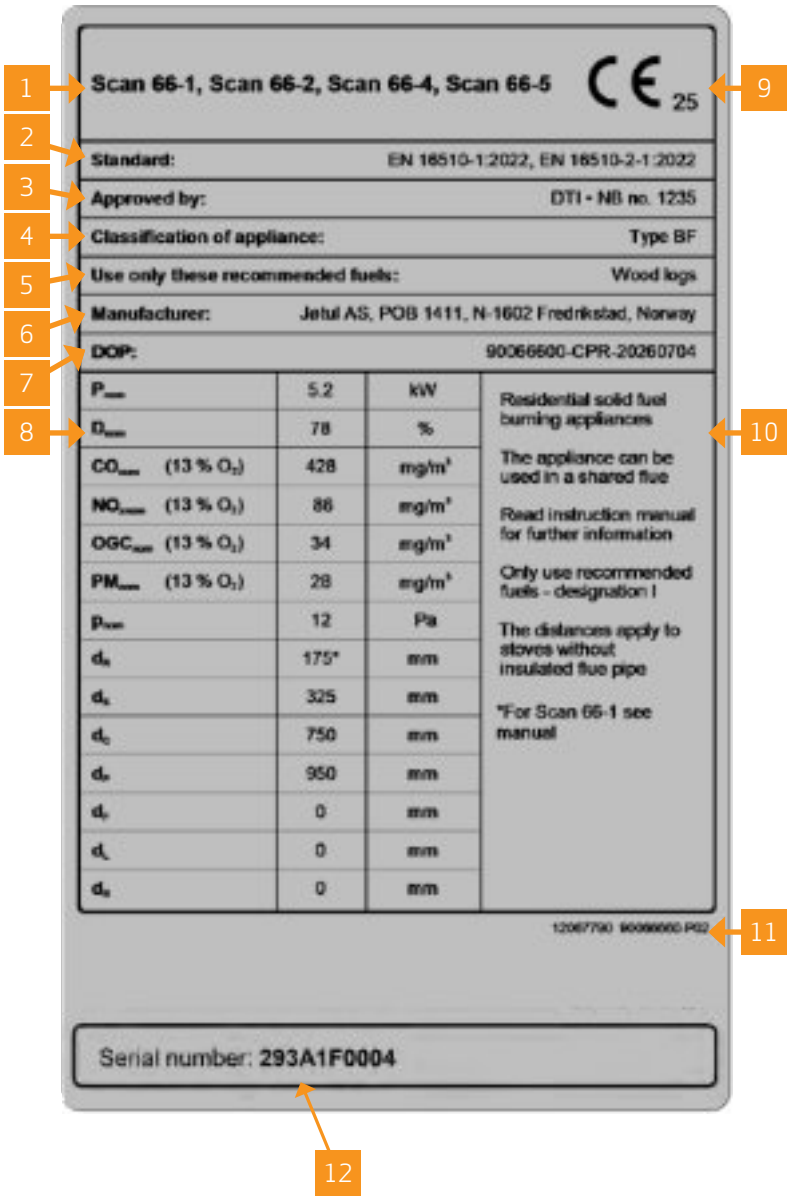

TYPE PLATE EXPLANATION

1. Type and/or the model number or designation to enable the appliance to be identified
2. Applicable standards
3. Name of test centre/certification number
4. Classification of appliance
5. Recommended fuels
6. Manufacturer's name and address
7. DOP document number
8. Table of values:

   P_{nom} - nominel heat output

   N_{nom} - energy efficiency at nominel heat output

   CO_{nom} - CO emission at 13 % O_2 at nominel heat output

   NO_{xnom} - NO_x emission at 13 % O_2 at nominel heat output

   OGC_{nom} - OGC emission at 13 % O_2 at nominel heat output

   PM_{nom} - dust emission at 13 % O_2 at nominel heat output

   p_{nom} - flue draught at nominel heat output

   Minimum distances to combustible material:

   d_R - back

   d_S - sides

   d_C - ceiling

   d_P - front

   d_F - front to the bottom front radiation area

   d_L - front to the side front radiation area

   d_B - below the bottom (not regarding feet)

9. CE mark of conformity - The digits indicate the year of issue of the certificate
10. Product specifications and instructions
11. Type plate number
12. Product registration number

PRODUCT REGISTRATION NUMBER

All Scan wood-burning stoves are provided with a product registration number. This is unique to your stove and may need to be referred to when you contact Scan A/S or your dealer, e.g. for service or ordering spare parts.

We recommend taking a picture of the type plate and saving it digitally, or writing the number down in a safe place – e.g. together with your housing documents.

DIMENSION SKETCH

Scan 66-1

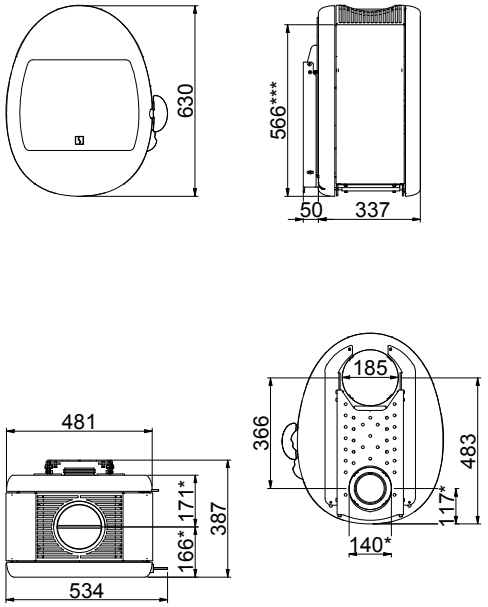

Scan 66-2

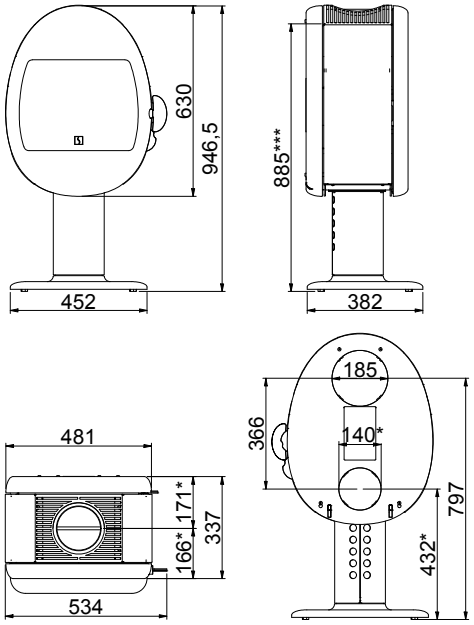

Scan 66-4

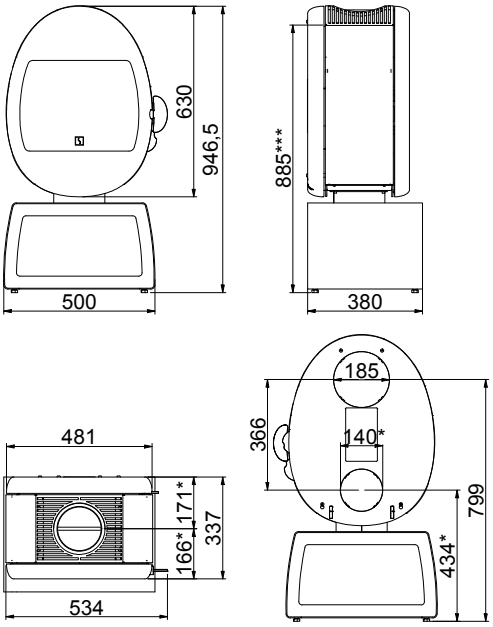

Scan 66-5

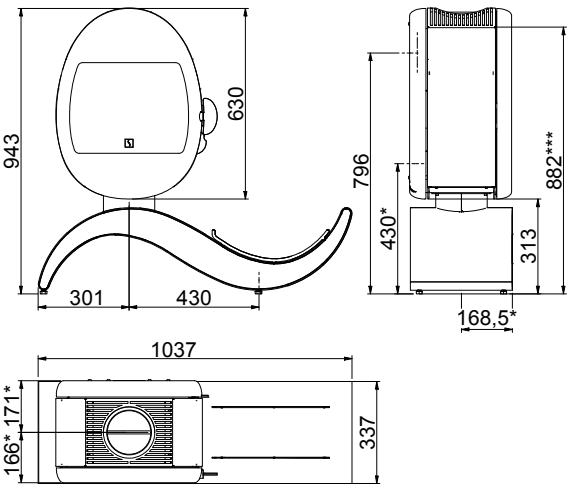

All distances are in mm.
All distances are minimum distances
* Connection of fresh-air intake Ø 100 mm
*** Height to the beginning of flue connecting piece at top outlet

MINIMUM DISTANCES

Minimum distance to flammable materials (insulated flue pipe)

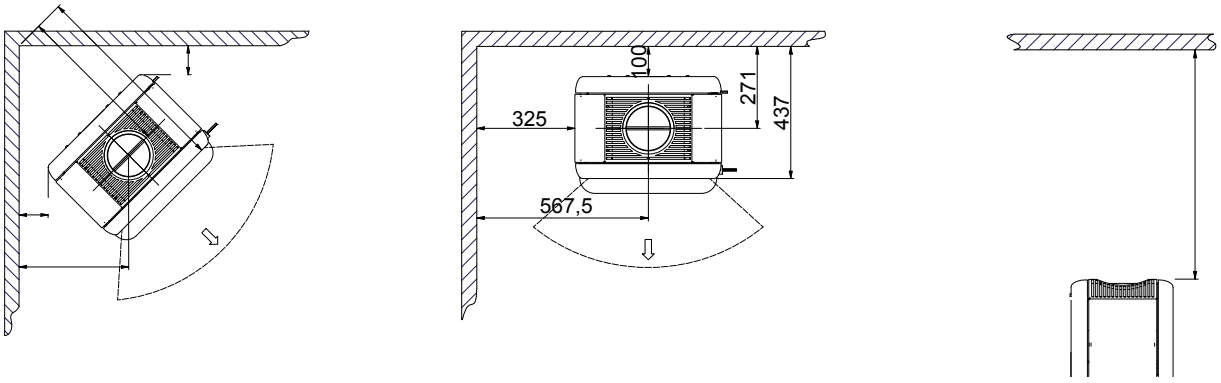

Minimum distance to flammable floor (wall model)

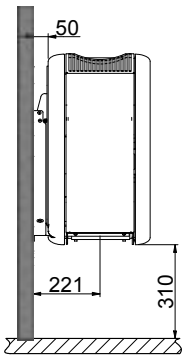

The wall model is only to be mounted
on a non-combustible wall!

Flammable material

Fire wall, e.g. 50 mm Jøtul Firewall, 110 mm brick or other material with corresponding fireproof and insulating abilities

All distances are in mm.
All distances are minimum distances

Minimum distance to flammable wall protected by a fire wall

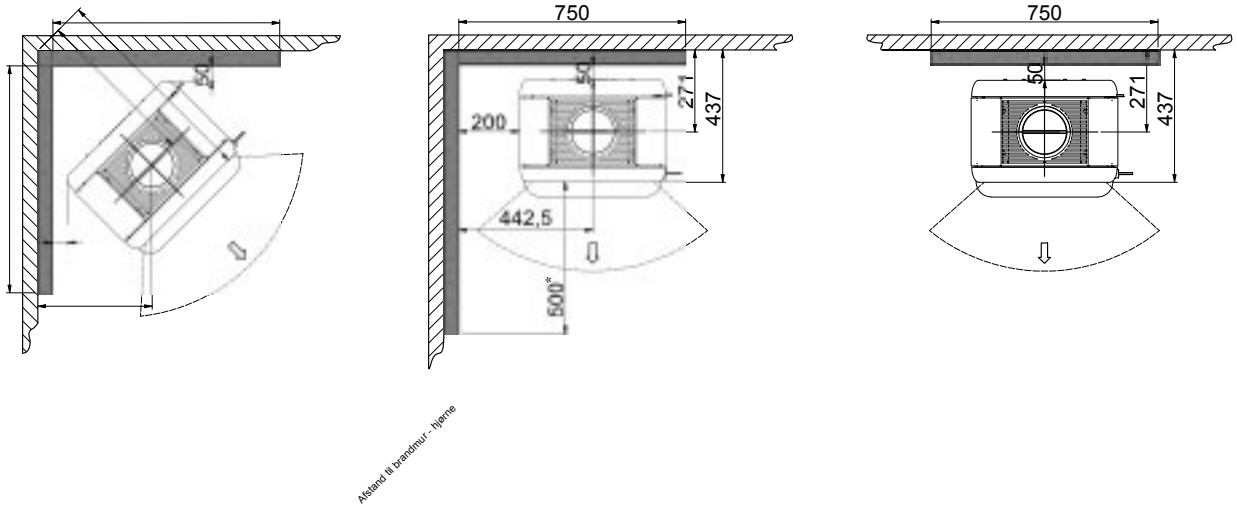

Afstand til brandmur - hjørne

Flammable material

Fire wall, e.g. 50 mm Jøtul Firewall, 110 mm brick or other material with corresponding fireproof and insulating abilities

All distances are in mm.
All distances are minimum distances
These distances apply for an insulated flue pipe, all the way down to the stove
* Distance to glass

ASSEMBLY

TOOLS NEEDED FOR MOUNTING OF THE STOVE

- Spirit level
- Open-end spanner
- 4 mm Allen key
- Ø10 mm wall drill
- Cutting nippers

CONTENTS OF PACKAGING

- 1 Scan 66 stove body
- 6 vermiculite plates
- 2 pins for baffle plates
- 1 connecting piece for fresh air inlet
- 1 log guard made of glass

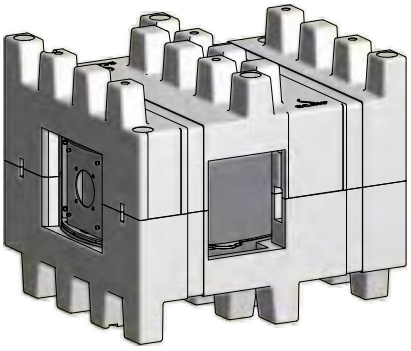

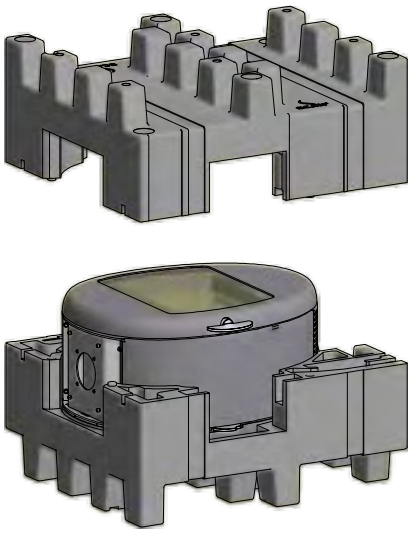

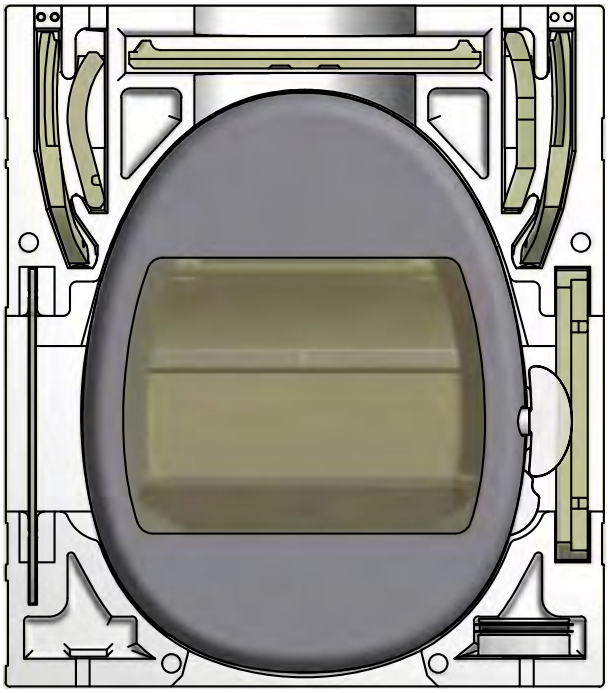

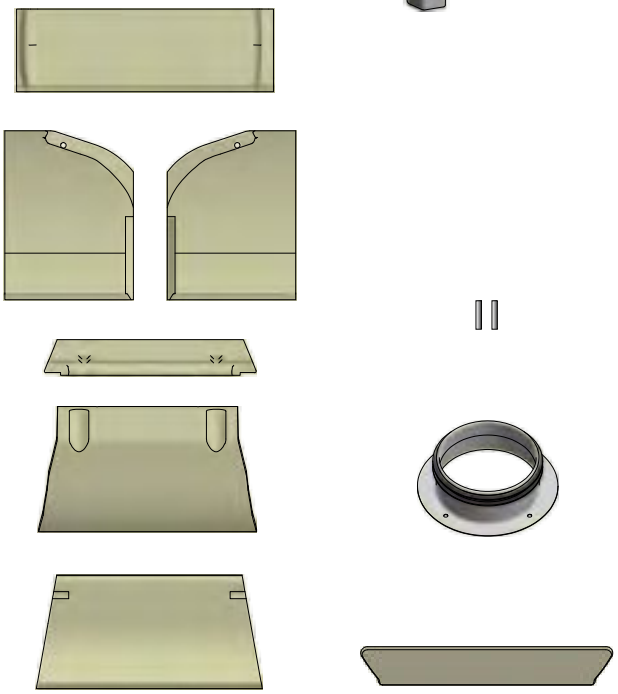

LOOSE PARTS

In the stoves combustion chamber you will find the following loose parts:

- 4 pcs. screws for connecting piece/fresh air
- Glove
- Seal for the connecting piece

ADDITIONAL ACCESSORIES

- Small shaped floor plate in glass or steel (steel only for Scan 66-2 & 66-5)
- Connecting piece for inside flue pipe, 6"
- Large shaped floor plate in glass or steel (steel only for Scan 66-2 & 66-5)
- Dekor plate for top

DISPOSAL OF PACKAGING

Your Scan stove may come supplied with the following packaging:

Wood packaging	The wood packaging can be reused and after final use can be incinerated as a CO_2 neutral product or sent for recycling.
Polystyrene top	Send for recycling or waste disposal
Foam	Send for recycling or waste disposal
Plastic bags	Send for recycling or waste disposal
Stretch/plastic film	Send for recycling or waste disposal

ROOM REQUIREMENTS

The stove must be installed in rooms with a good ventilation. A good ventilation is vital for the efficient operation of your stove.

We recommend installing smoke detectors in the home.

The distances specified in the manual only apply if you comply with the maximum amount of firewood. They only guarantee fire safety.

You should however assess whether furniture or other items might become excessively dry due to being too close to the stove. There is no guarantee that the present building materials can withstand the temperature in relation to visual changes.

- Check that Building Regulations and any local by laws are followed during installation

EXISTING CHIMNEY AND PRE-FABRICATED ELEMENT CHIMNEY

If you intend to connect your stove to an existing chimney, it makes sense to contact an authorised Scan dealer, or a local chimney sweep, for advice. These experts will also let you know if your chimney needs renovating.

- When connecting a pre-fabricated element chimney, follow the manufacturer's connection instructions for the relevant chimney type

CONNECTION BETWEEN STOVE AND STEEL CHIMNEY

Your Scan dealer, or local chimney sweep, can advise you on choosing a make and type of steel chimney. This ensures that the chimney will match your wood-burning stove.

REQUIREMENTS FOR CHIMNEY

The chimney must at least have a T400 designation, with G for the soot fire test. We recommend a chimney with a minimum internal diameter of 148 mm and a length of min. 4 metres.

If you opt to connect the stove with an elbow pipe, you should use a curved elbow, as this gives a better draught.

If you connect the stove with a sharp elbow pipe, the cleansing lid must be placed in the vertical part so that the horizontal part can be cleaned through here.

If the chimney is fitted with a smoke extractor, it must be possible to adjust it to a suitable draft.

The appliance should not be installed in a shared flue.

The requirements to the chimney and the flue pipe in terms of safety distances must be met. The chimney shall be proven according to EN 13384-2:2015+A1:2019 depending on the individual situation on site.

- Choosing the wrong length or diameter of chimney could impair functionality
- Always comply exactly with the instructions provided by the chimney supplier

REQUIREMENTS FOR INSULATED CHIMNEY

The insulation level for insulated chimney: T400-N1-D-Vm-L50050-G100.
The air gap should be 10-15 mm.

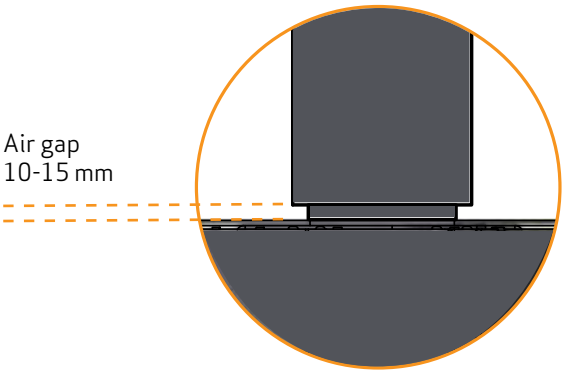

FRESH AIR INTAKE

In a well-insulated house, the air used up by the burning process has to be replaced. This particularly applies to houses with mechanical ventilation. There are different ways of making sure that an air exchange takes place. The most important thing is to ensure that there is a supply of air to the room where the wood stove is located. The external wall vent must be located as close to the wood stove as possible, and you must be able to close it when you are not using the wood stove.

National and local building regulations must be followed with regard to the connection of fresh-air intake.

CLOSED COMBUSTION SYSTEM

You should use the closed combustion system for the wood-burning stove if you live in a newly-built, airtight home. External combustion air is connected through a ventilation pipe via the wall or floor.

We recommend mounting a valve in the ventilation pipe in order to avoid condensate in the stove and the pipe system, when the stove is not in use. It can also be an advantage to insulate the ventilation pipe.

Minimum Ø 100 mm ventilation pipe, maximum length: 6 metres with a maximum of one bend. We recommend smooth steel pipes.

Connecting piece for fresh air inlet is loose in the packaging.

NOTE: If the stove has a fresh air connexion or closed combustion, the ventilation pipe must be open, when the stove is in use!

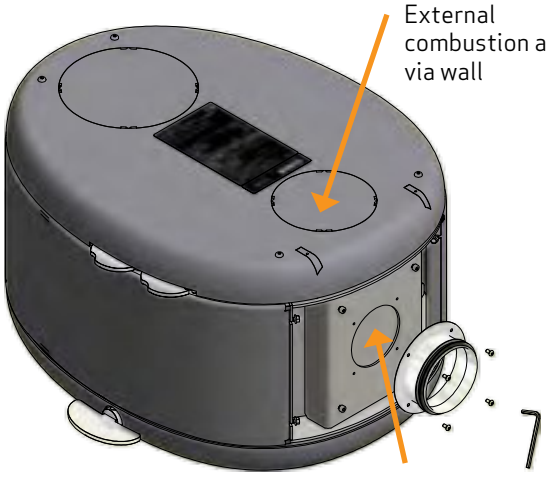

If you want external combustion air via a wall, remove the cover plate at the rear of the stove with a pair of cutting pliers

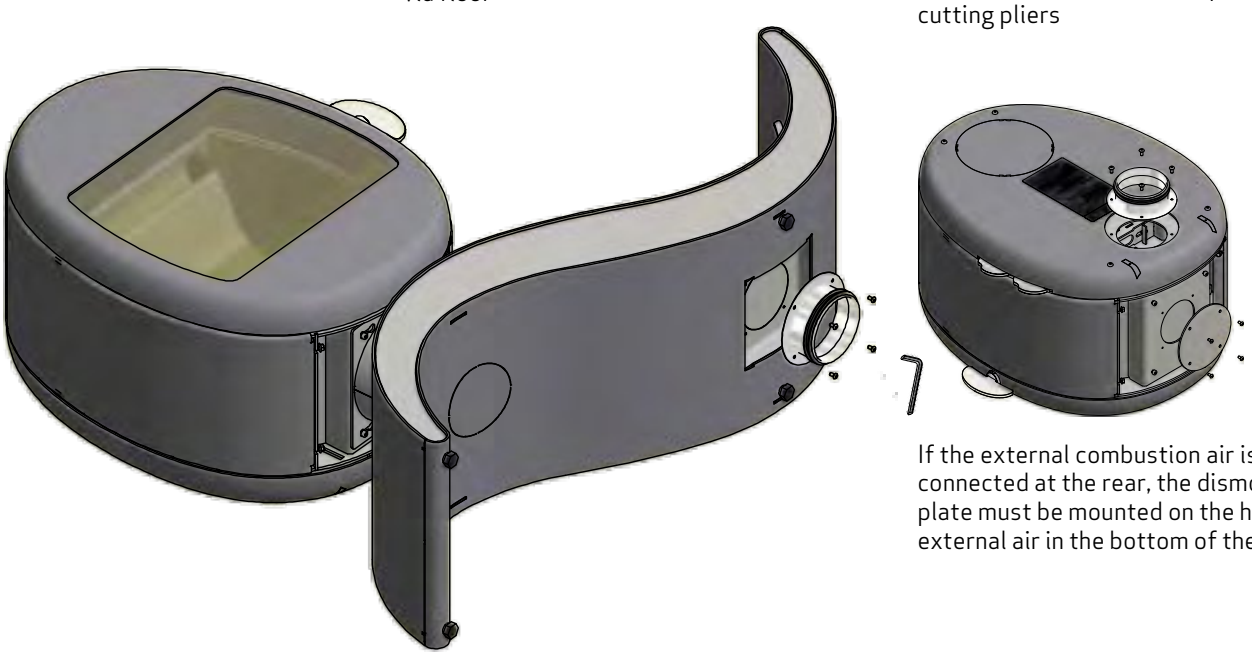

If the external combustion air is connected at the rear, the dismounted plate must be mounted on the hole for external air in the bottom of the stove

FIREWOOD STORAGE

Scan 66-5 S-Curve is approved for wood storage on condition that the following is respected:

The wood must be placed min. 100 mm from the stove and is not to be stapled higher than to the lower edge of the handle.

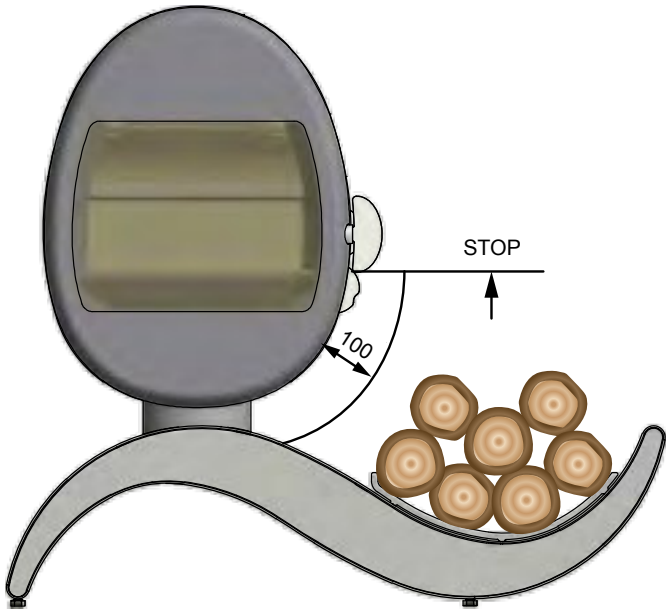

SAFETY DISTANCE

European, national and local regulations concerning safety distances for wood-burning stoves must be complied with.

There are no demands concerning the distance to non-flammable materials, but we recommend a distance of 50 mm in order to facilitate the cleaning of the stove, the flue pipes and the chimney and to prevent possible damages to the wall.

OPENING OF THE DOOR

Push the handle backwards in order to open the door

1

Close the door without moving the handle

2

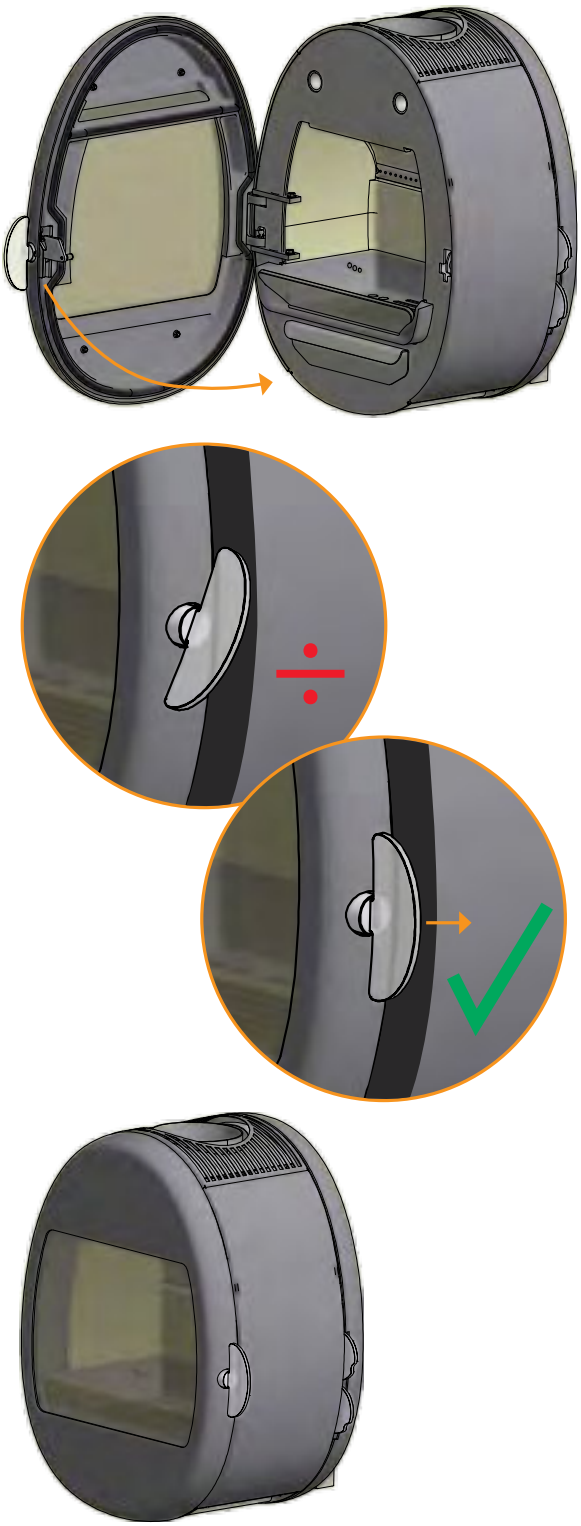

FITTING THE FLUE CONNECTION PIECE IN THE TOP OUTLET

The stove is prepared from the factory for top outlet.

The gasket for the flue connection piece, flue connection piece and screws can be found in the stove's combustion chamber.

1 Remove the screws from the bottom plate

2 Remove the plates

3 Mount the ceramic gasket on the connecting piece

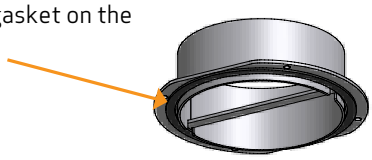

4 Fasten the connecting piece with screws

5 Refit the plates

FITTING THE FLUE CONNECTION PIECE IN THE REAR OUTLET

1

Remove the screws from the bottom plate

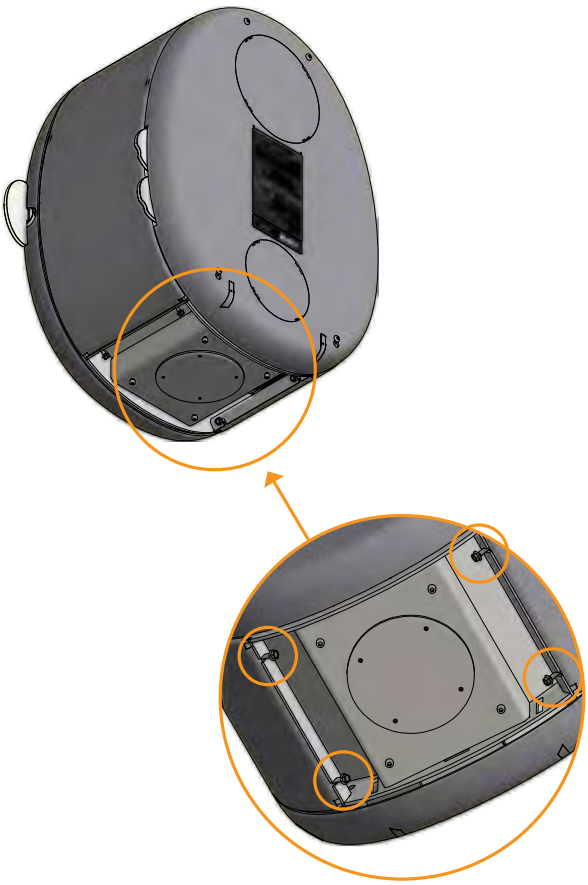

2

Remove the plates

3

Mount the ceramic gasket on the connecting piece

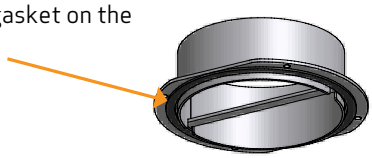

4

Remove the screws from the rear plate.

Using cutting pliers, cut off the cover plate from the rear plate and at its securing points

5

Using cutting pliers, cut off the cover plate from the heat shield at its securing points

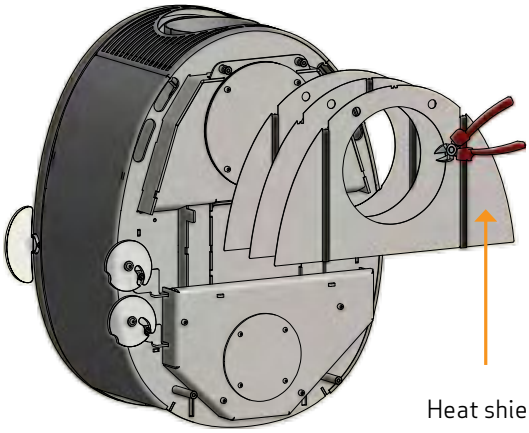

6

Remove the cover.

This is to be used later as a seal and cover at the top of the smoke outlet

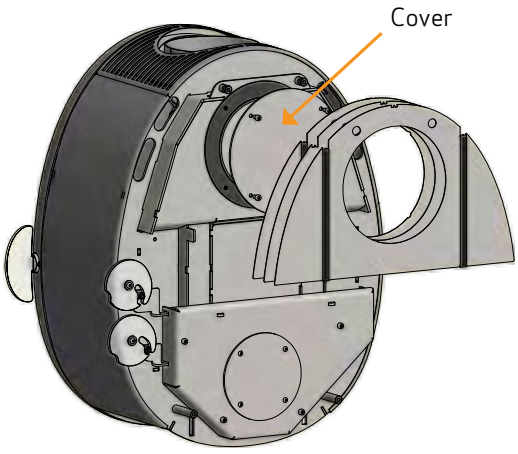

FITTING THE FLUE CONNECTION PIECE IN THE REAR OUTLET

7

Fit the connecting piece with the four screws.

Fit the cover and tighten it

8

Refit the plates

HEIGHT ADJUSTMENT OF STOVE

The stove has four adjustment screws under the stove. Use the adjustment screws and the adjustment key (Accessories) to get the stove to stand straight and level.

If the floor plate is used, the stove must be adjusted so that the plate can be placed under the front of the stove.

NOTICE: It is very important that the stove is level to allow an optimal function of the door. Please note that once mounted the stove can no longer be adjusted!

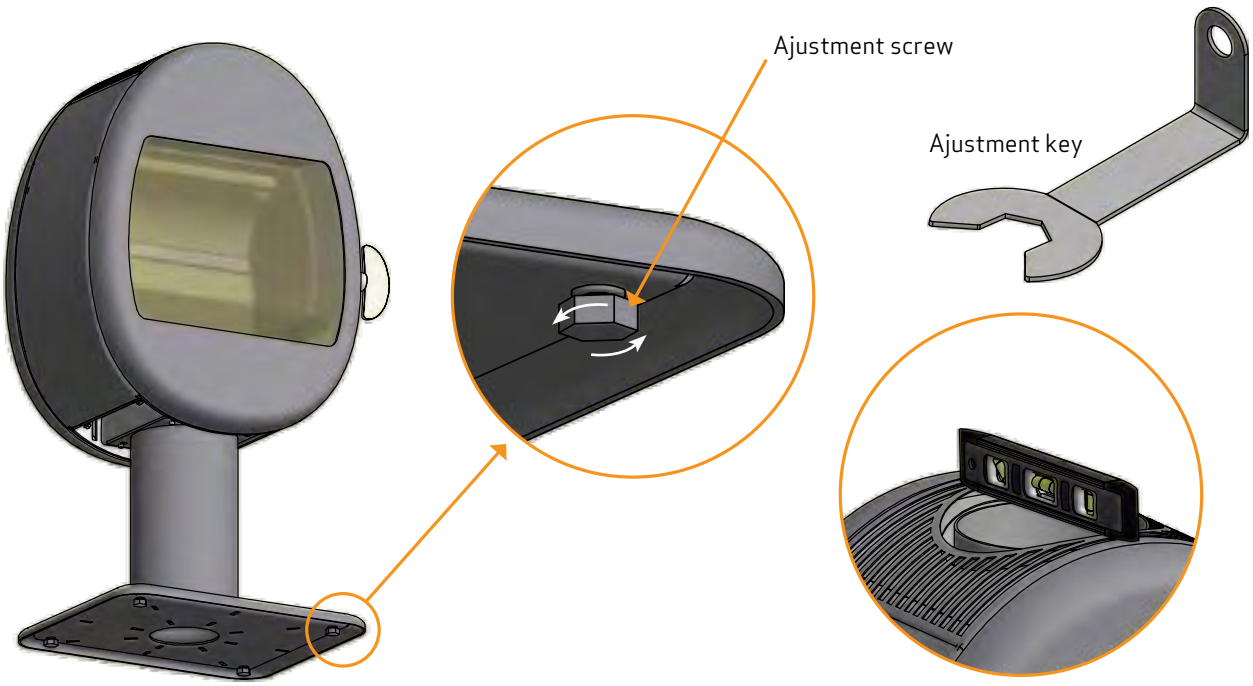

SCAN 66 -1

The bag contains:

A 2 x

B 6 x

C 4 x

In order to mount the wall fitting to a chimney made of Leca-blocks you need 6 pcs. FBS 8x70/5 US Leca screws.

The test report can be required at Scan A/S

Installation must be planned and executed in accordance with national and local building regulations.

The stove must only be fitted to a non-flammable wall. There must be no form of flammable component in the wall.

To ensure correct installation we recommend that a building expert and a local chimney sweep be commissioned to plan and outline the installation with a view to subsequent approval.

For wall installation we recommend using the wall brackets supplied.

If a chimney is installed on top of a wall-hung model, the chimney must be fully self-supporting. It must not rest on the wood-burning stove. There must be a distance of at least 6 mm between the first section and the flange on the flue collar. Please consult a specialist.

Scan A/S disclaims all liability for the installation of wall-hung wood-burning stoves.

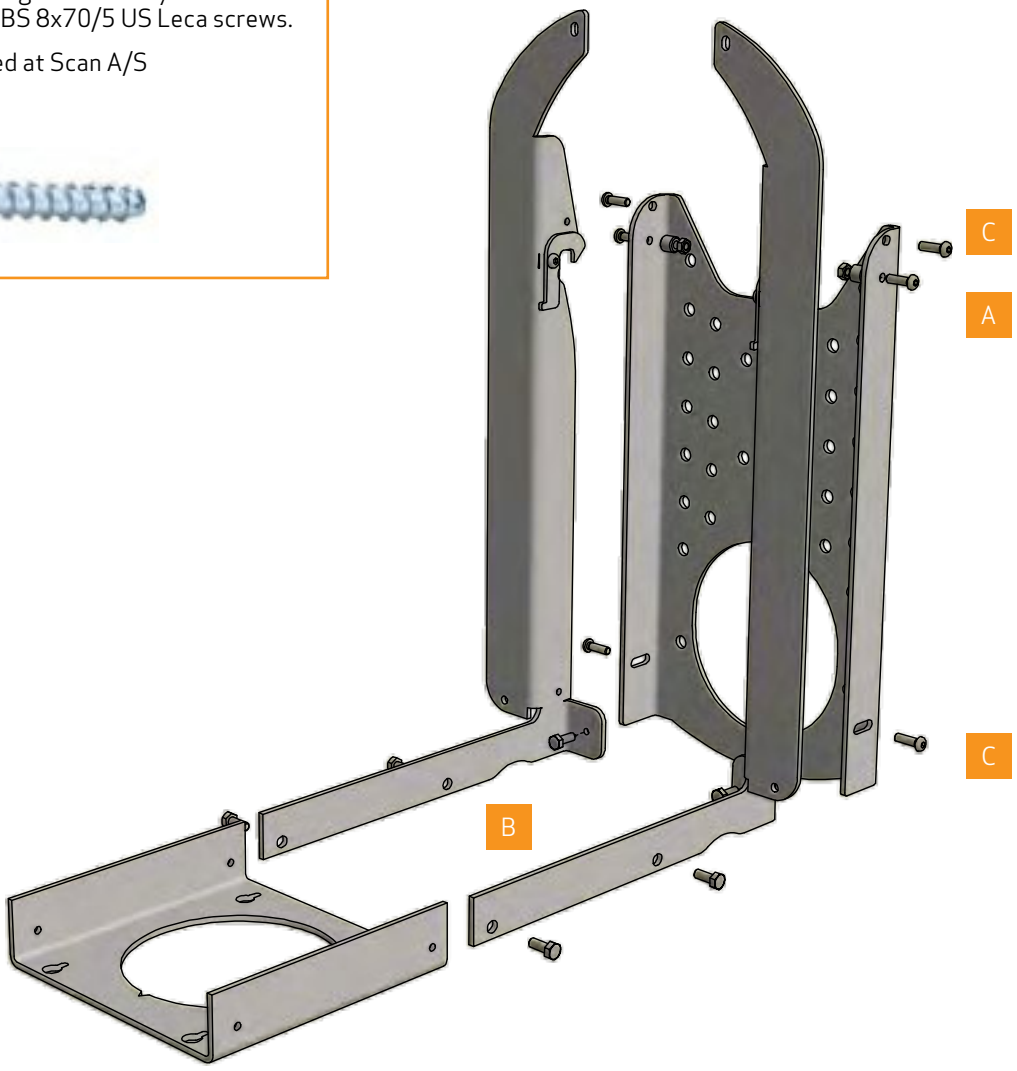

1

The stove must remain in the packaging during the mounting of the wall fitting at top outlet.

If the stove is to be connected with a rear outlet, the stove must be lifted out of the packaging and laid on e.g. a carpet, the front facing downwards

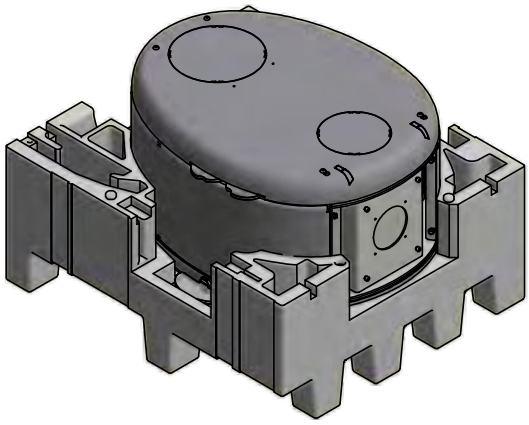

2

Mount the wall fitting on the wall. It is important that it is level.

Mount bushing, screw and nut

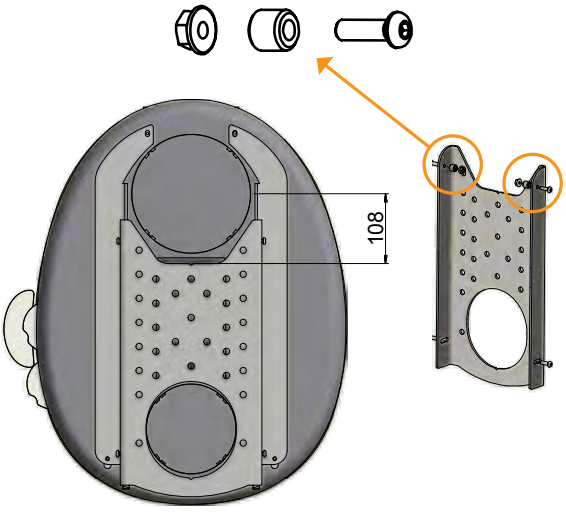

3

Dismount the rear plate by removing the four screws. Place the rear plate on an even surface

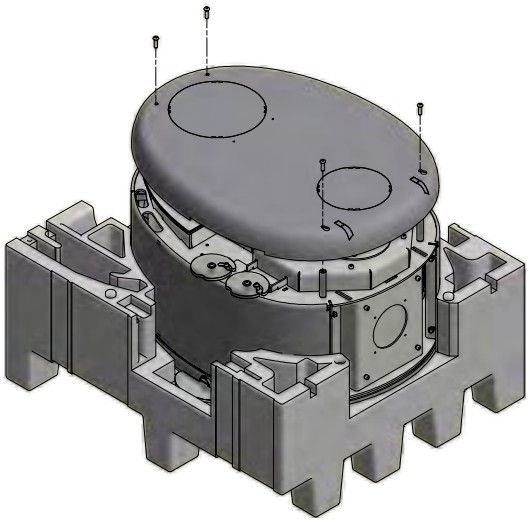

4

Remove the slits – use a drilling machine and nippers

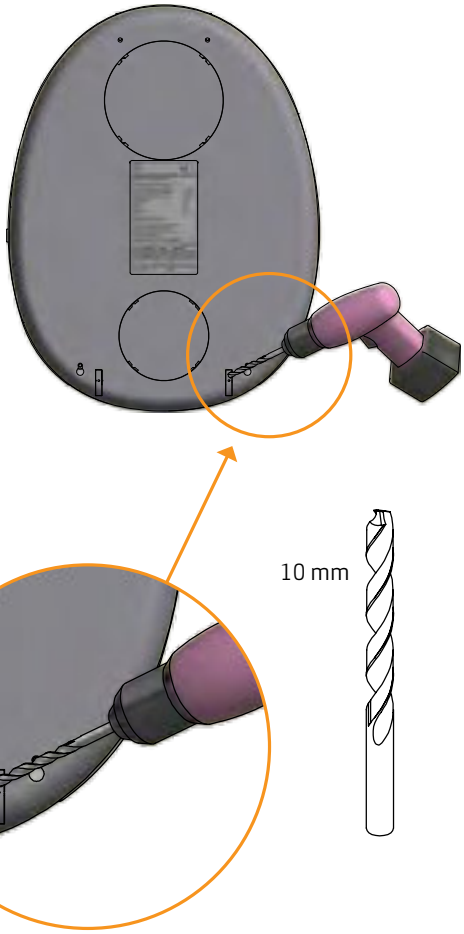

5

Mount the rear plate loosely; it is not to be fixed, until after the wall fitting has been mounted

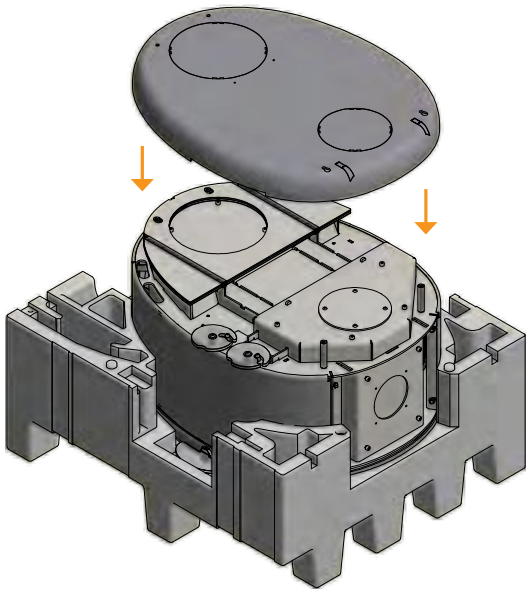

6

Mount the bottom plate on the existing four screws

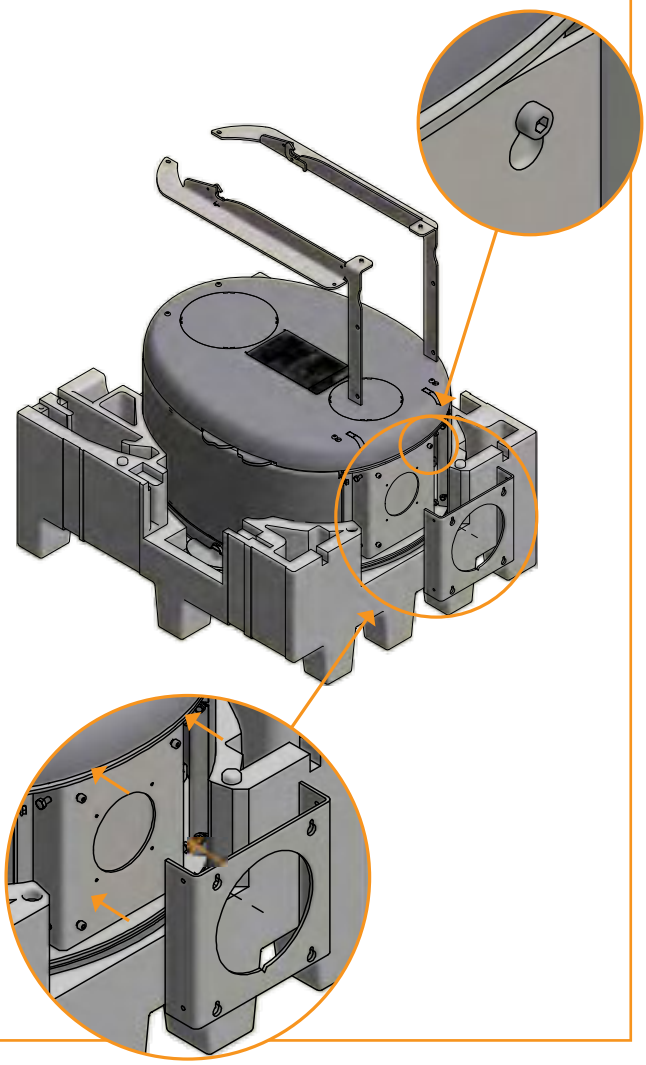

7

Let the rails glide down through the hole along the bottom plate

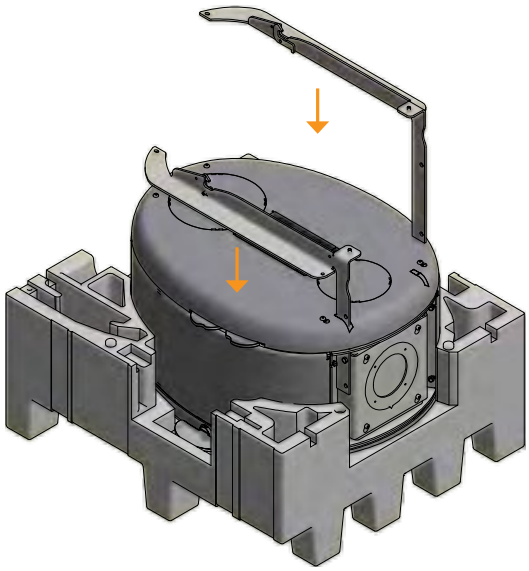

8

Mount the four screws loosely in the rear plate again, now with the wall fitting in between.

Screw the rails and the bottom plate together in the sides.

Tighten the four bottom screws.

Tighten up all screws

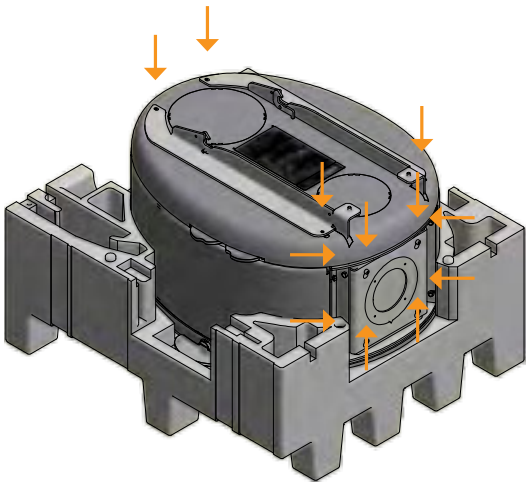

9 Mount the two adjustment screws

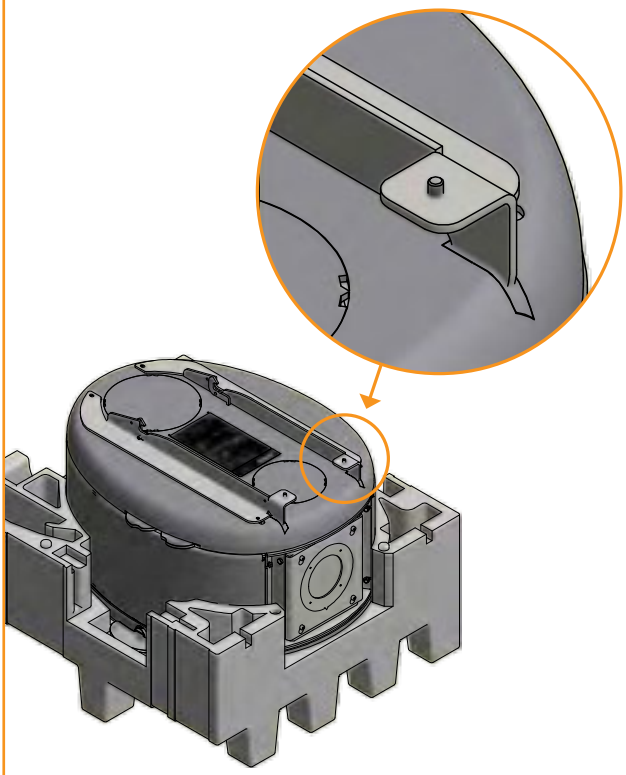

10 Now hook the stove onto the wall fitting on the wall

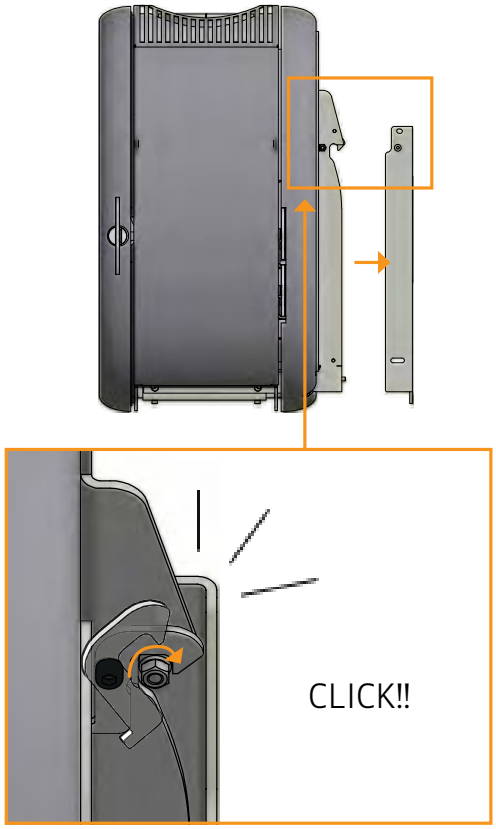

11 Adjust the stove so that the doors has the correct slope

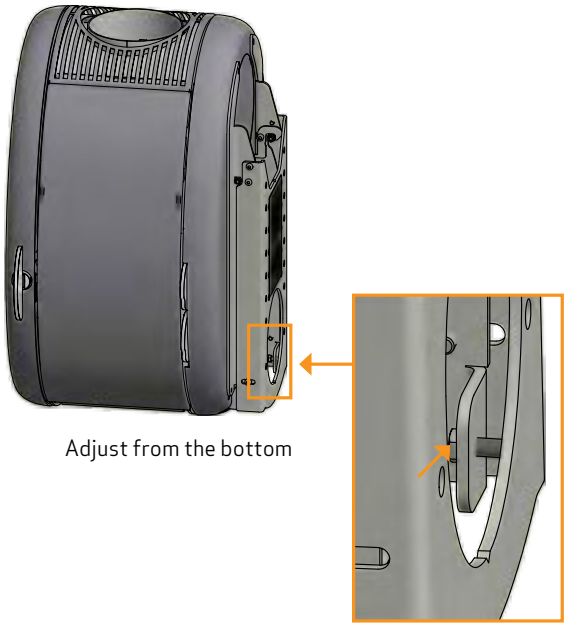

12 Mount the screws in order to lock the stove to the wall fitting

MOUNTING OF THE BURN CHAMBER ON THE PEDESTAL BASE

SCAN 66-2

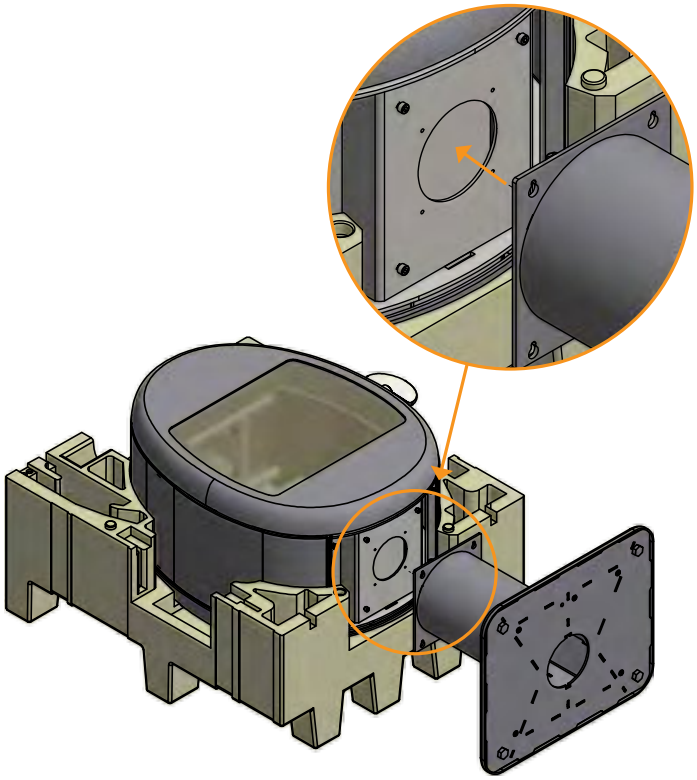

MOUNTING OF EXTERNAL AIR SUPPLY ON THE PEDESTAL BASE

External combustion air from the bottom

Use the delivered division plate. First cut out the hole, mount the division plate, then the pedestal.

Fasten the screws.

(See page 14)

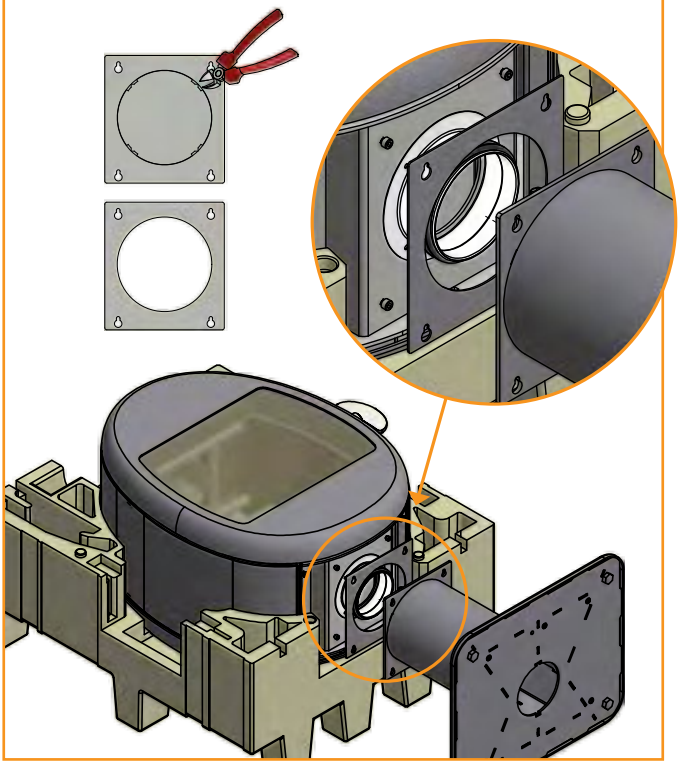

External combustion air from the rear

Mount the delivered cover plate, then the pedestal.

The cover plate from the rear is not to be reused.

Fasten the screws.

(See page 14)

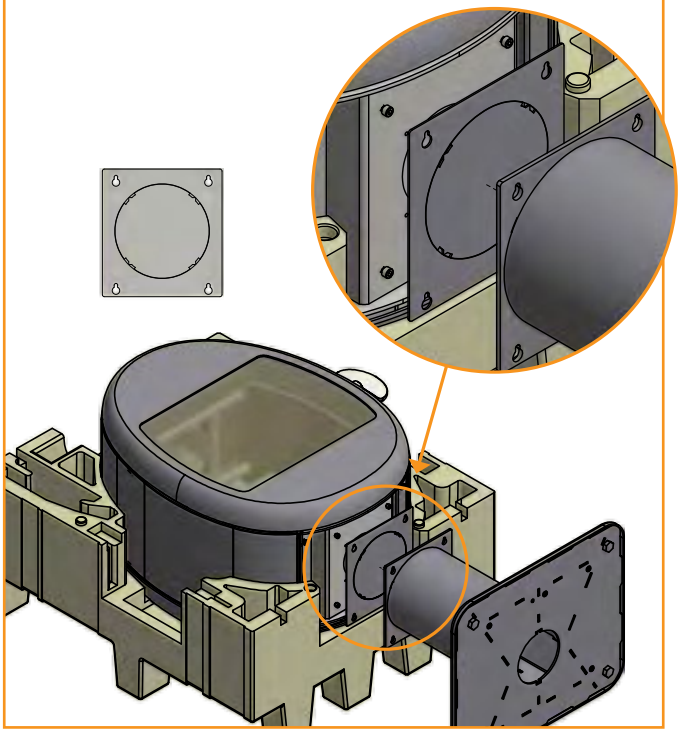

MOUNTING OF THE BURN CHAMBER ON THE PLINTH BASE

SCAN 66-4

Fasten the four screws after mounting the base

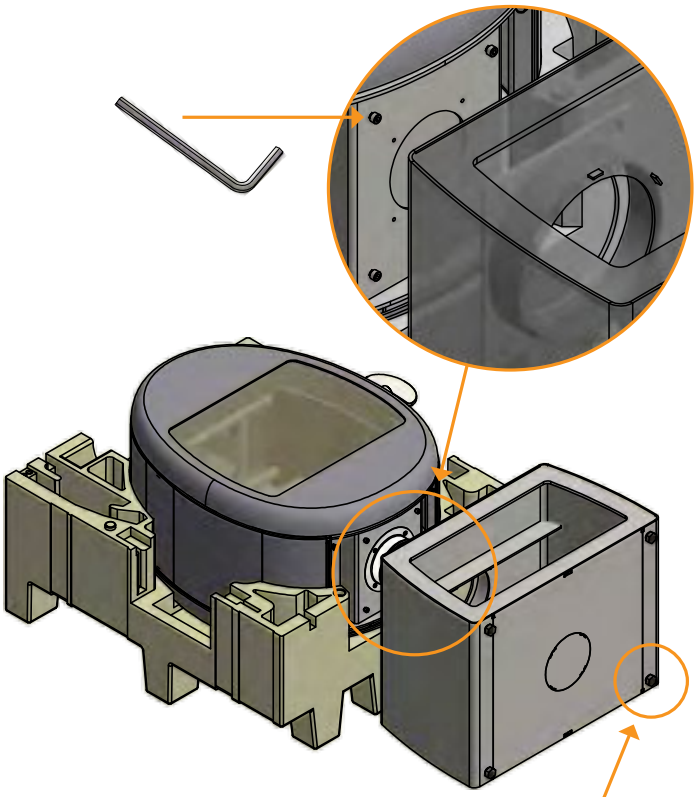

MOUNTING OF EXTERNAL AIR SUPPLY ON THE PLINTH BASE

External combustion air from the bottom

Prepared for external air at the bottom.

Cut out the hole with a pair of cutting nippers

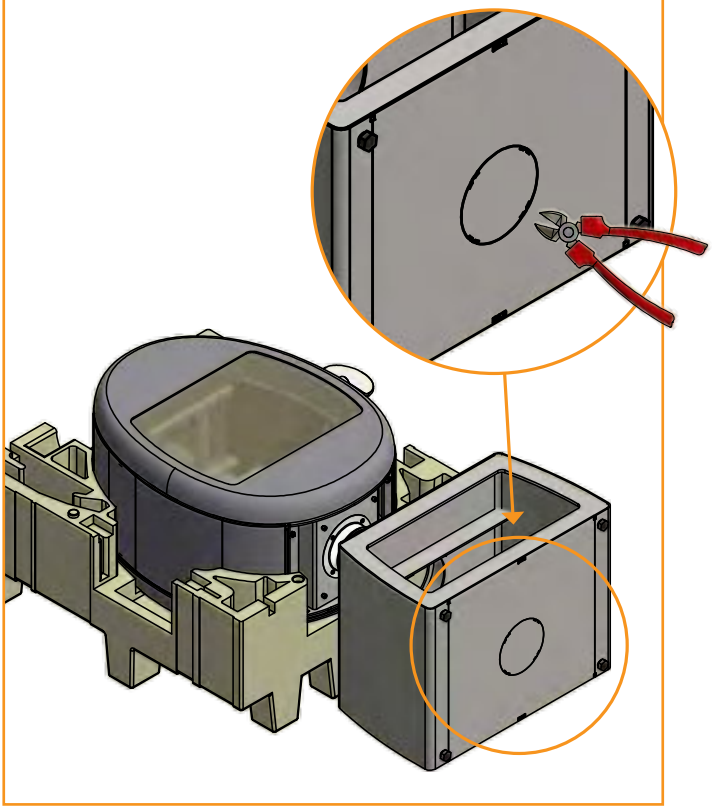

MOUNTING OF THE BURN CHAMBER ON THE S-BASE

SCAN 66-5

Mount the S-shaped base on the stove before removing the packing.

Loosen the four screws (ca. 4-5 mm) so that it is possible to hook the base on the stove.

Place the delivered magnets on the markings on the front of the base and mount the loose front. Please note that the base can be mounted at the right or at the left of the stove.

Fasten the screws lightly so that it is possible to lift the stove with base up.

Make sure that the S-base is horizontal – if necessary, use a spirit level. Adjust the stove on the base, and then tighten the four screws.

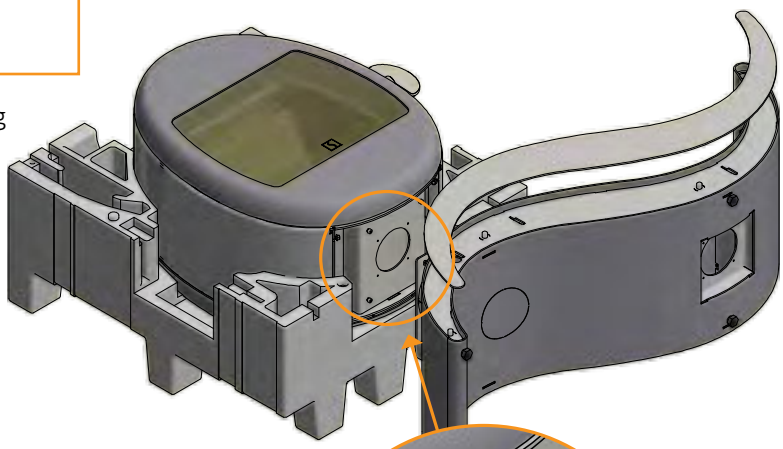

MOUNTING OF EXTERNAL AIR SUPPLY ON THE S-BASE

External combustion air from the bottom

Prepared for external air at the bottom.

Cut out the hole with a pair of cutting nippers

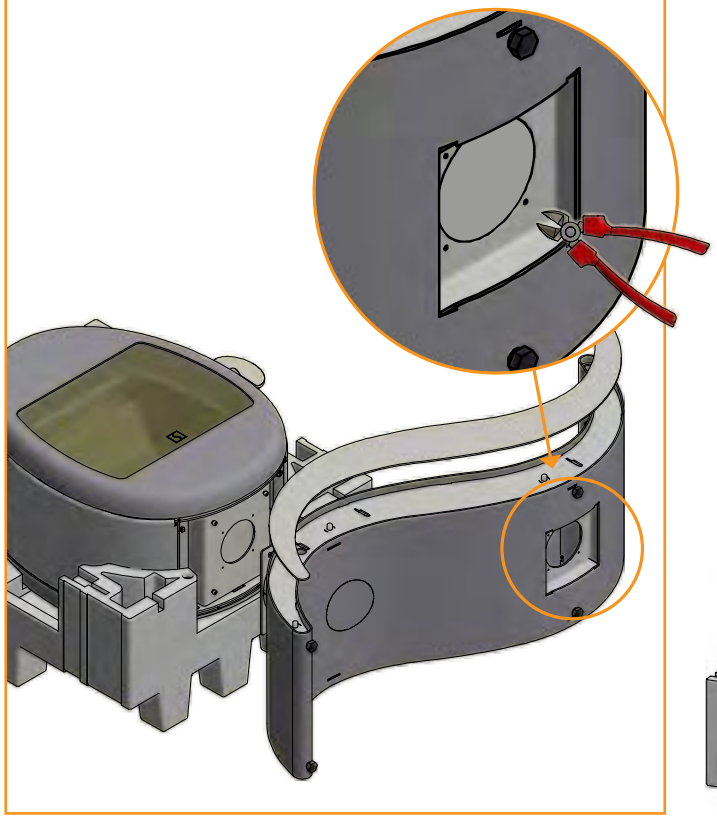

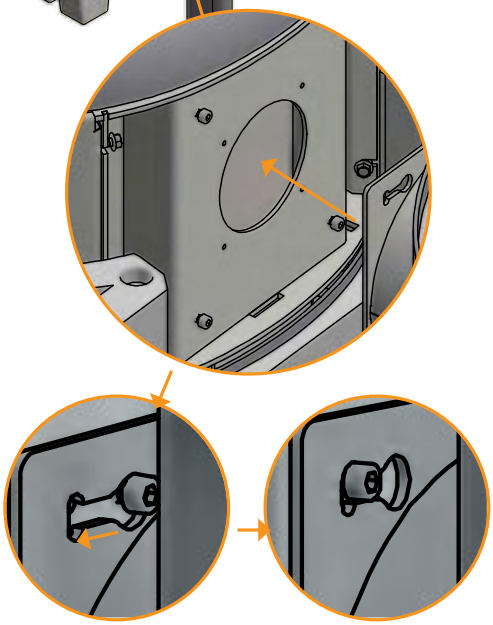

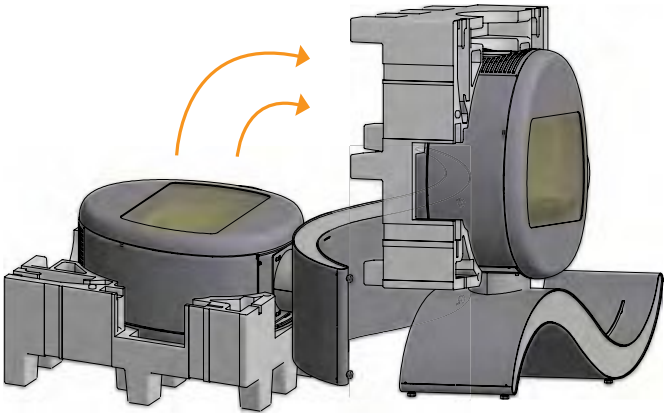

MOUNTING OF COMBUSTION CHAMBER

Note that the baffle plates are made of porous, ceramic material, and can break. Exercise care when working.

1 Please remove protection

2 Mount the rear plate

3 Slide the plate behind the grate

4 Rear plate mounted

5 Fit the left side plate in at the top

6 Slide the plate in place

7 Left side plate mounted

8 Mount the right side plate in the same way as the left plate

9 Right side plate mounted

10 Upper front plate

11 Pass the plate towards the rear

12 Lift the plate over the side plates

13 Let the plate glide back on the upper edge

14 Upper baffle

15 Mount the upper baffle (the carvings must turn backwards)

16 Push the plate upwards so that it rests on the front plate

17 Push the plate a bit backwards so that it rests on the rail in the back

18 Lower baffle

19 Let the plate rest on the rail with the air slots

20 Push the plate backwards in order to mount the pins

21 Mount the pins in the sideplates

22 All burn chamber plates have now been mounted

23 Mount the glass log guard

24 The stove can now be taken into use

LOAD-BEARING FOUNDATION

All items in our product range come under the category of lightweight fireplaces and stoves and do not normally require any reinforcement of the beam structure. They can be positioned on ordinary beams/floor.

You should of course make sure that the foundation on which the stove is positioned can indeed support the weight of the stove and, where applicable, a steel chimney, if you have opted for this solution. In case of doubt about the carrying capacity of the floor, please consult a building expert.

FLOOR PLATE (ACCESSORY)

If you are placing the stove on a flammable floor, you must comply with the national and local regulations on the size of any non-flammable subsurface required to cover the floor around the stove.

Your local Scan dealer can advise you on regulations concerning protection of flammable materials in the vicinity of your stove.

The floor plate's function is to protect the floor and flammable material against any sparks that may occur. A floor plate can be made of steel or glass, but the stove can also be erected on clinker concrete, natural stone or similar materials.

This Scan wood-burning stove has an integrated floor plate at the bottom and can thus be erected directly on flammable material without the need for further protection underneath the stove.

Small shaped floor plate
in glass or steel
(Suitable for corner installation)

Large shaped floor plate
in glass or steel

INSTRUCTIONS FOR USE

CB-TECHNOLOGY (CLEAN BURN)

The stove is equipped with CB technology. In order to ensure optimal combustion of gases released during the combustion process, air passes through a specially developed system of channels. The heated air is conducted into the combustion chamber through the holes in the rear lining of the combustion chamber and at the baffle plates. This airflow is controlled by the rate of combustion and cannot therefore be regulated.

NOTE: The wood must never be placed higher than the tertiary holes at the rear of the burn chamber (This does not apply at a cold start).

PRIMARY AIR

The primary air is used when lighting the stove and must be closed after 10-20 minutes, when the fire has caught well. The primary air can be used continuously when using very hard wood.

Settings for normal load: 0 - 30%

SECONDARY AIR

Secondary air is pre-heated and fed indirectly to the fire. At the same time, the secondary airflow cleans the glass pane to avoid soot build-up. If you over-restrict the secondary airflow, soot can build up on the glass pane. The secondary airflow determines the heat output from your wood stove.

Settings for normal load: 50 - 70%

BAFFLE PLATES

The baffle plates are located in the upper part of the combustion chamber. The plates hold back smoke, making sure it stays inside the combustion chamber for a longer time before escaping through the chimney. This reduces the flue gas temperature as the gases have more time to dissipate heat to the stove.

The baffle plates must be removed for sweeping; see “Maintenance”. Note that the baffle plates are made of porous, ceramic material, and is liable to break easily. You should therefore handle them with care.

The baffle plates are subject to wear and tear and not covered by the warranty.

ASH CONTAINER

Open the door of the stove to access the ash container under the combustion chamber.

- The ash container can be warm. Wear a glove when handling the stove
- Keep the ash container closed except during ignition, refuelling and removal of residue material to prevent fume spillage
- The ash container must not be become too full and must therefore be emptied at regular intervals
- Never empty ashes into a flammable container. Ashes can contain glowing embers long after you finish operating the stove

Pull out the ash drawer and empty it

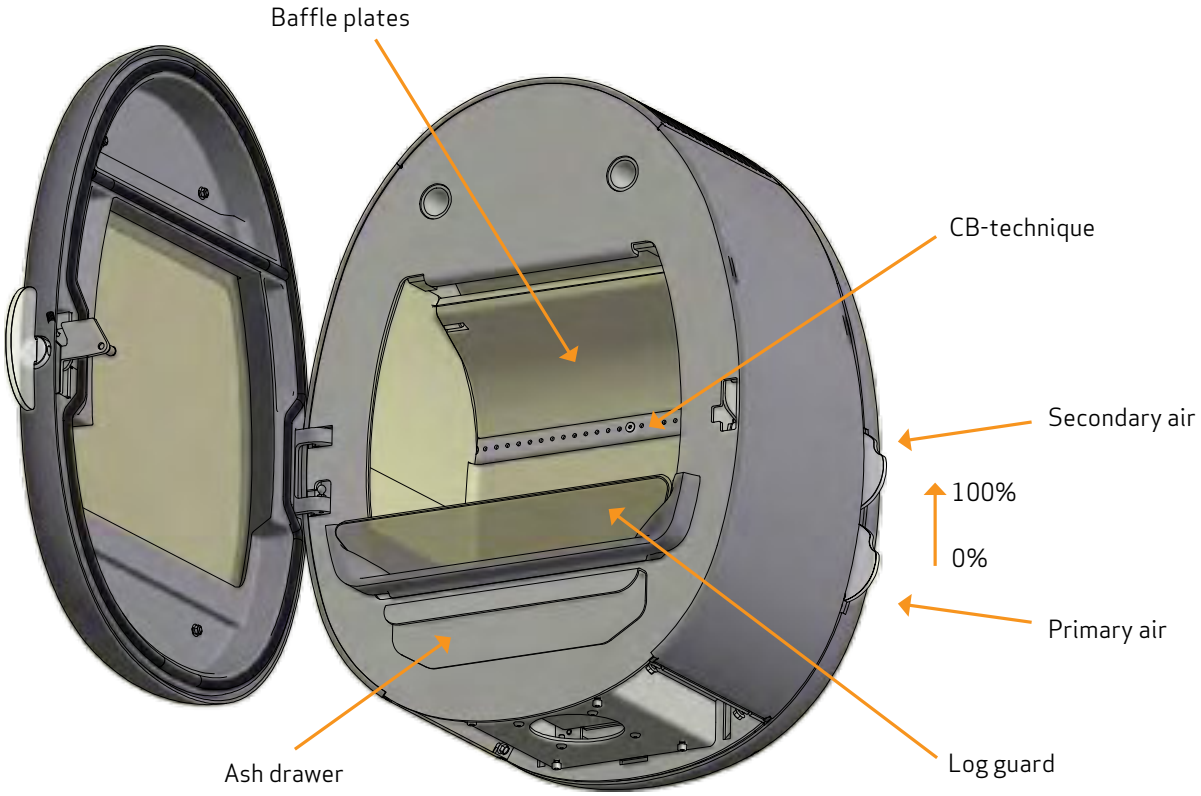

SETTINGS FOR NORMAL LOAD:	
Primary air:	0 - 30%
Secondary air:	50 - 70%

REFUELING ON TO A LOW FIRE BED

If there is insufficient burning material in the fire bed to light a new fuel charge, excessive smoke emission can occur. Refueling must be carried out onto a sufficient quantity of glowing embers and ash that the new fuel charge will ignite in a reasonable period. If there are too few embers in the fire bed, add suitable kindling to prevent excessive smoke.

OPERATION WITH DOOR LEFT OPEN

Operation with the door open can cause excess smoke. The appliance must not be operated with the appliance door left open except as directed in the instructions.

DAMPERS LEFT OPEN

Operation with the air controls or appliance dampers open can cause excess smoke. The appliance must not be operated with air controls, appliance dampers or door left open except as directed in the instructions.

IINSTRUCTIONSFOR HEATING

FIRST HEATING AND PAINT HARDENING

Perform the first heating using a small amount of wood, approximately half of the normal fuel load, and use smaller pieces.

Open both the primary and secondary air inlets fully. A slow and gradual heating process helps prevent paint damage and material deformation.

Once the initial fuel has burned down to glowing embers, you can begin the paint-hardening process.

- Load the allowed fuel quantity, again using smaller logs and pieces.
- After this load has burned out, repeat the process 2 to 3 times with the maximum allowed fuel dose, with the primary and secondary air inlets fully open.

  During paint hardening, the product may emit a non-toxic odor. Ensure the room is well ventilated.

  Allow the fire to burn with strong draft until no odor remains.

ENVIRONMENTALLY-FRIENDLY FIRING

Avoid turning down your woodburning-stove to the point where no flames are visible from the wood, as this leads to poor combustion and low efficiency. The gases released from the wood will not be burnt off due to the low temperature in the combustion chamber. Some of the gases will condense in the stove and flue system as soot, and this could lead to your chimney catching fire at a later point. The residual smoke which exits the chimney will pollute the surrounding area and cause an unpleasant smell.

LIGHTING

We recommend the use of fire lighters, or similar products. Using fire lighters helps light the wood more quickly and keeps the combustion process clean.

NOTE: Never use liquid lighting fuels!

The combustion chamber lining may turn black when the fire is lit.
It will burn clear again the next time wood is added.

NOTE!
See our video
about correct firing

"TOP DOWN" LIGHTING

"Top down" lighting is a more environmentally friendly way of lighting the fire and helps to keep the glass area as clean as possible.

Do as follows for a correct "top down" lighting:

- 2 pieces of wood approx. 20 - 25 cm long with a weight of approx. 0.5 - 0.6 kg per piece.
- 1 pieces of wood approx. 0.3–0.4 kg. 8-12 thin pieces of firewood of about 20 cm in length, with a total weight of approx. 0.5 kg
- 3 fire lighters in bag or block form

1. Place the pieces of wood, firewood and fire lighters in the combustion chamber as shown below
2. Set the primary and secondary air controls to maximum in the lighting phase. If the fire is too strong, you may throttle down the primary air damper (at the left)

NOTE: The wood must never be placed higher than the tertiary holes at the rear of the burn chamber (This does not apply at a cold start).

CONTINUOUS OPERATION

It is important to obtain as high a temperature as possible in the combustion chamber. This results in best possible use of the stove and fuel, as well as achieving clean combustion. In this way you will avoid build-up of soot on the combustion chamber lining and glass pane. During operation, you should not see any smoke; just a movement in the air that indicates combustion is in progress.

- After completing the lighting phase, you should have a good layer of embers in the stove; you can then start operation of it properly
- Add two pieces of wood at a time: they should be about 0,4 - 0,6 kg in weight and about 25 cm long

NOTE: The wood must catch fire quickly. This is why we recommend setting the primary air flow fully open. Operating the stove at too low a temperature and with too little primary air can lead to gases igniting, which can damage the stove.

- When adding wood, always open the glass door carefully to prevent smoke escaping. Keep the door closed during the whole combustion phase
- Never add wood, while the fire is burning nicely

At the EN 16510-test the stove was fired as shown on the picture:

With 2 pieces of birch each 175 mm – 14 % wood humidity - with a total weight of 1.3 kg.

Primary air damper 100 % open – secondary air damper 40 % open - door is set ajar
After 2 min - door is closed
After 2.5 min - primary air damper is adjusted to 60%

Refuelling interval: 46 min

The criterion for the end of test cycle: 4.5-5 % CO^2

WARNING ABOUT OVER-FIRING

If the stove is continiously fired with larger amounts of wood than recommended and/or receives too much air, this can cause a heavy heat development liable to damage both stove and the surrounding walls. We therefore recommend that you always observe the max. recommended amount of fuel (See under "Technical Data").

USING THE STOVE IN VARIOUS WEATHER CONDITIONS

The way the wind affects the chimney can have a big impact on how your stove reacts under various wind loads; you may need to adjust the airflow to achieve good combustion. Fitting a damper in the flue pipe may also help, as it will allow you to regulate the draught under changing wind loads. The damper must not close more than 80% of the flue pipe.

Fog and mist can also have a big impact on chimney draught; you may need to use other settings for the combustion air to achieve good combustion.

FIRING IN THE SPRING OR AUTUMN

In the spring/autumn transition period, where there is less need for heating, we recommend you light the stove "top down" once, perhaps adding just two pieces of wood as above to ensure that the combustion chamber lining burns clean again.

THE FUNCTION OF THE CHIMNEY

The chimney is the wood-burning stove's motor; its performance determines how well your stove will work. The draught in the chimney creates negative pressure in the wood-burning stove. The negative pressure draws the smoke out of the stove and takes in air through the combustion air damper to fuel the combustion process. Combustion air is also used for the air wash system that keeps the window clear of soot.

The draught in the chimney is created by the difference in temperature inside and outside the chimney. The higher temperature difference, the better draught. This is why it is important that the chimney reaches operating temperature before you reduce the damper settings to restrict combustion in the stove (a brickwork chimney will take longer to reach operating temperature than a steel chimney). It is very important that the operating temperature is reached as quickly as possible on days when the draught in the chimney is poor due to unfavorable wind and weather conditions. You need to get a few flames going as quickly as possible. Chop the wood extra thin; use an extra fire lighter etc.

- After longer periods without use, you must check the chimney flue for blockages
- The appliance should not be installed in a shared flue

CHIMNEY FIRE

In the event of a chimney fire, keep the stove door, the ash container, and all dampers on the stove closed. In an emergency, call the fire service.

- We recommend that you get a chimney sweep to check the chimney before using the stove again

GENERAL NOTES

PLEASE NOTE! Parts of the wood-burning stove, especially the outer surfaces, become hot during use. Due care should be exercised.

- Wear a glove when handling the stove
- Never empty ashes into a flammable container. Ashes can contain glowing embers long after you finish operating the stove
- Keep the combustion chamber closed except during ignition, refuelling and removal of residue material to prevent fume spillage
- Keep the air intake and output holes free from any accidental blokage while the stove is in use
- When the stove is not in use you can close the dampers to avoid a draught through the stove
- If the stove has not been used for some time, you should check the flue passageways for potential blockages before relighting
- We advise you strongly not to use the stove over night. The stove is not suited for this purpose

NOTE: Never place flammable material in the radiation zone of the stove!

HANDLING OF THE FUEL

SELECTING WOOD/FUEL

You can use any type of wood as fuel. However harder woods, such as beech or ash, are generally better for heating, as they burn more evenly and create less ash. Other woods, such as maple, birch and spruce, are excellent alternatives.

PREPARATION

The best fuel is obtained where the tree has been felled and the wood sawn and split before May 1st. Remember to cut the wood to match the size of the combustion chamber. We recommend a diameter of 6-10 cm. The length should be about 6 cm shorter than that of the combustion chamber to leave enough space for air to circulate. If the diameter of the wood is greater than the above, it should be split down its length. Wood that has been split dries faster.

STORING

You need to store the sawn and split wood in a dry place for 1-2 years before it will be dry enough to burn. Wood dries faster if you stack it in an airy place. Before using it, it is a good idea to store the wood for a few days at room temperature. Remember that wood absorbs moisture from the air during autumn and winter.

MOISTURE

To avoid problematic impact on the environment and to ensure optimum operating economy, the wood should be perfectly dry before it can be used as fuel. If you use wood that is too damp, most of the heat it produces will be used up in evaporating the water. The stove will accordingly not increase in temperature, nor emit heat to the room as a result. This is obviously poor economy, and it will cause soot build-up on the glass pane, in the stove and in the chimney. Operation using moist wood also pollutes the environment.

- Maximum wood moisture content should not exceed 20%. A moisture content of 15-18% will deliver best efficiency
- An easy way of checking wood moisture content is to knock the ends of the two pieces of wood together. If the wood is moist, the sound will be slightly muffled
- It is a good idea to take the wood into the house a day before it is to be used

USE OF THE FOLLOWING AS FUEL IS ILLEGAL

NOTE: It is absolutely prohibited to fire with painted, pressure impregnated or glued wood, or sea driftwood.

NOTE: Never use gasoline, gasoline-type lantern fuel, kerosene, charcoal lighter fluid, ethyl alcohol or similar liquids to start or "reignite" a fire in the stove. Keep all such liquids well away from the stove while it is in use.

NOTE: Nor should you ever burn chipboard, plastics, waste or treated paper. These contain substances that are hazardous to human health, to the environment, your stove, and your chimney.

In short - make sure you only use proper wood.

CALORIFIC VALUE OF THE WOOD

The various woods have different calorific values. In other words, for certain species of wood, you will need to use a greater quantity to achieve the same heating performance. This Instuction Manual assumes that you will be using beach, which has a very high calorific value and is also the easiest wood to get hold on. If you use oak or beech as fuel, you need to bear in mind that these wood types have a greater calorific value than for example birch. To avoid any risk of damage to the stove, you should therefore make sure to use less fuel in these cases.

Wood types	kg Drywood/m^3	Compared to beech
Hornbeam	640	110%
Beech/Oak	580	100%
Ash	570	98%
Maple	540	93%
Birch	510	88%
Pine	480	83%
Fir	390	67%
Poplar	380	65%

MAINTAINANCE

SWEEPING THE CHIMNEY AND CLEANING THE STOVE

Follow national and local regulations for sweeping the chimney. We recommend having the stove cleaned regularly by a chimney sweep.

Before cleaning the stove and sweeping the flue pipe and chimney, we recommend removing the baffle plates.
(See section "Removal of baffle plates and combustion lining")

NOTE: All service and reparation must be done, when the stove is cold.

CHECKING THE STOVE

Scan A/S recommends that you check your stove thoroughly after sweeping/cleaning. Check all visible surfaces for cracks. Check that all joints are tight and that the gaskets are correctly seated. Worn or deformed gaskets should be replaced.

SERVICING

We recommend that the stove is thoroughly serviced at least every two years by a qualified fitter. Remember only to use original spare parts.

The service should include the following:

- Lubricate hinges using copper grease
- Check the gaskets. Replace any that are broken or have turned hart
- Check the combustion chamber lining and the grate
- Check heat-insulating materials
- Check the locking device

COMBUSTION CHAMBER LINING

Slight cracks can appear in the combustion chamber lining due to moisture or sudden heating/cooling. These cracks have no influence on the output or lifetime of your stove. However,if the lining starts to crumble and fall out, you must replace it.

The combustion chamber lining is not covered by the warranty.

GASKETS

All wood-burning stoves have seals made of ceramic material fitted to the stove, the door and/or the glass. These seals are subject to wear and tear and must be replaced when necessary.

Gaskets are not covered by the warranty.

PAINTED SURFACES

Clean your wood-burning stove by wiping it down with a dry, lint-free cloth.

If the paint finish gets damaged, you can purchase repair paint in spray form from your Scan dealer. As slight differences in colour shade are possible, we recommend you spray a larger area to achieve a natural blend. For best results, apply repair spray when the stove is warm, but it should preferably not be scalding hot.

NOTE: Make sure to air the room thoroughly after applying spray paint.

REMOVAL OF BAFFLE PLATES AND COMBUSTION CHAMBER LINING

Be very careful when removing the baffle plates from the stove.

- Lift up the lower baffle and dismount both pins. Then pull the plate downwards and take it out
- Push the upper baffle forwards so that it is freed from the fittings at the rear of the combustion chamber. Then take out the plate
- Lift the combustion chamber lining's sides, remove them from the rear cover and take them out
- Remove the rear cover

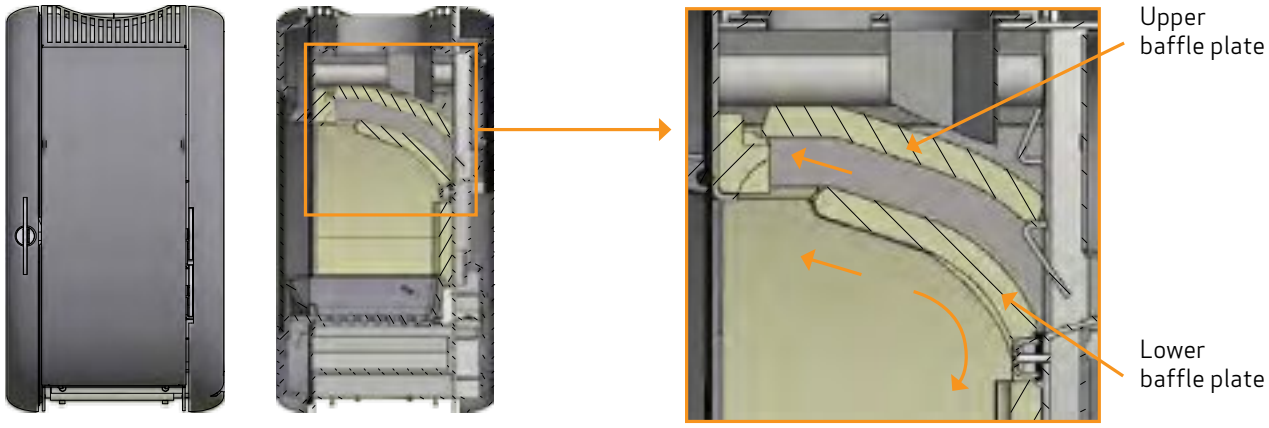

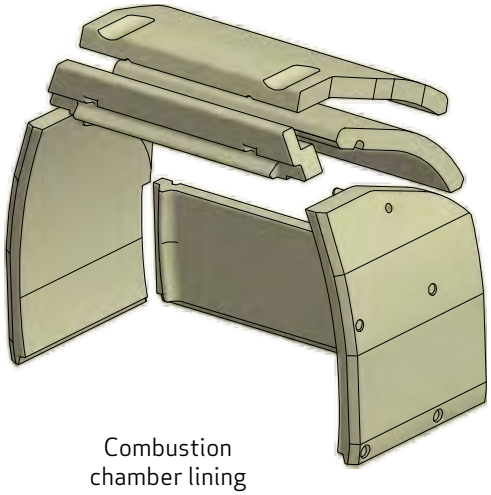

Combustion
chamber lining

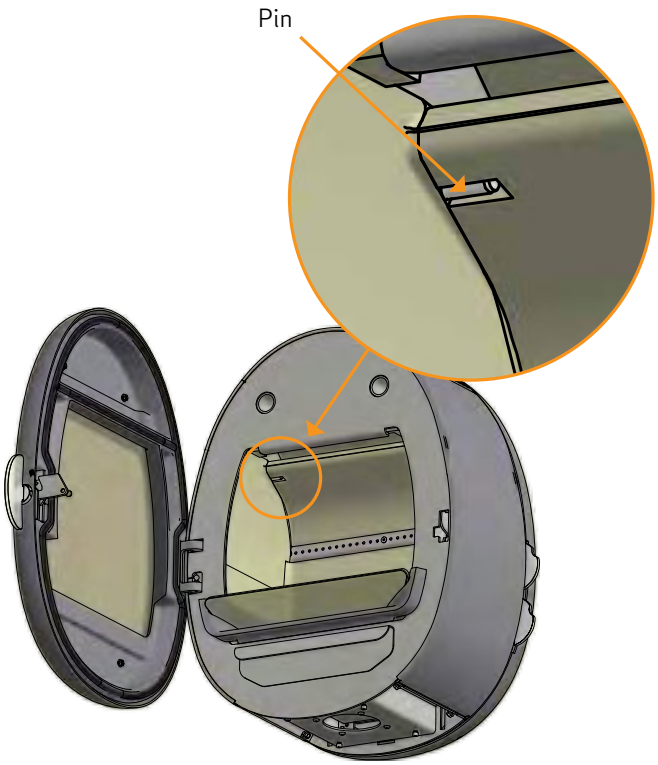

CLEANING THE LOG GUARD

The stove has a thick glass log guard that is easy to take out for cleaning (use normal glass cleaner).

CLEANING THE GLASS

Our wood-burning stoves are designed to prevent serious soot build-up on the glass. The best way to achieve this is to make sure you have a good supply of combustion air. It is also very important that the wood is dry and the chimney correctly dimensioned.

Even if you operate the stove in accordance with our instructions, a slight film of soot may still accumulate on the glass. You can easily remove this film by wiping the glass down with a dry cloth and then with a cloth dampened with glass cleaner.

- Please note that the glass cleaner is not to get into contact with the gaskets, as this can discolour the glass permanently
- The glass cleaner must not come into contact with the painted surfaces, as these can be damaged

DISPOSAL OF STOVE PARTS

Steel/cast iron	Send for recycling
Glass	Dispose of as ceramic waste
Combustion chamber lining	Vermiculite and chamotte are not recyclable. Dispose of as waste.
Baffle plate	Vermiculite is not recyclable. Dispose of as waste.
Gaskets	Dispose of as waste

TROUBLESHOOTING

SMOKE ESCAPING

- Damp wood
- Chimney is not properly dimensioned for the stove
- Is the chimney the right height for its surroundings?
- At rear outlet, check that the flue pipe does not obstruct the chimney draught
- Chimney not drawing properly
- Check if the smoke gas pipe/chimney are blocked
- Vacuum in room
- The door is opened before the embers have burned down sufficiently

WOOD BURNING TOO QUICKLY

- The air valves are set incorrectly
- Inferior firewood (waste wood, pallets etc.)
- The baffle plates is incorrectly mounted or missing
- Chimney too large

SOOT BUILD-UP ON GLASS

- Incorrect secondary airflow setting
- Damp wood
- Inferior firewood (waste wood, pallets etc.)
- Vacuum in room
- Excessive primary air
- Wood pieces too large on lighting
- Chimney not drawing sufficiently

WHITE SHADOW ON THE INSIDE OF THE GLASS

- Over-firing (See "Instructions for heating")
- Vacuum in the room
- Too much primary air

EXCESSIVE SOOT BUILD-UP IN CHIMNEY

- Poor burning (more air required)
- Damp wood

THE SURFACE OF THE STOVE IS TURNING GREY

- Overheating (see instructions for heating)

POOR HEATING PERFORMANCE OF STOVE

- Damp wood
- Inferior wood quality with low fuel value
- Not enough wood
- Baffle plates are not fitted correctly

SMELL AND SOUND OF THE STOVE

- The lacquer on the stove hardens when you use the stove for the first time; this can cause an odour. Open a window or a door for ventilation, and make sure the stove is heated up sufficiently to avoid odours later
- When heating up and cooling down, the stove may make some clicking noises. These are due to the huge temperature differences to which the material is exposed and do not indicate any product defects

THE DOOR DOES NOT CLOSE

It may occur during transport that the locking device moves out if its correct position, so that the door does not close properly. This can easily be adjusted.

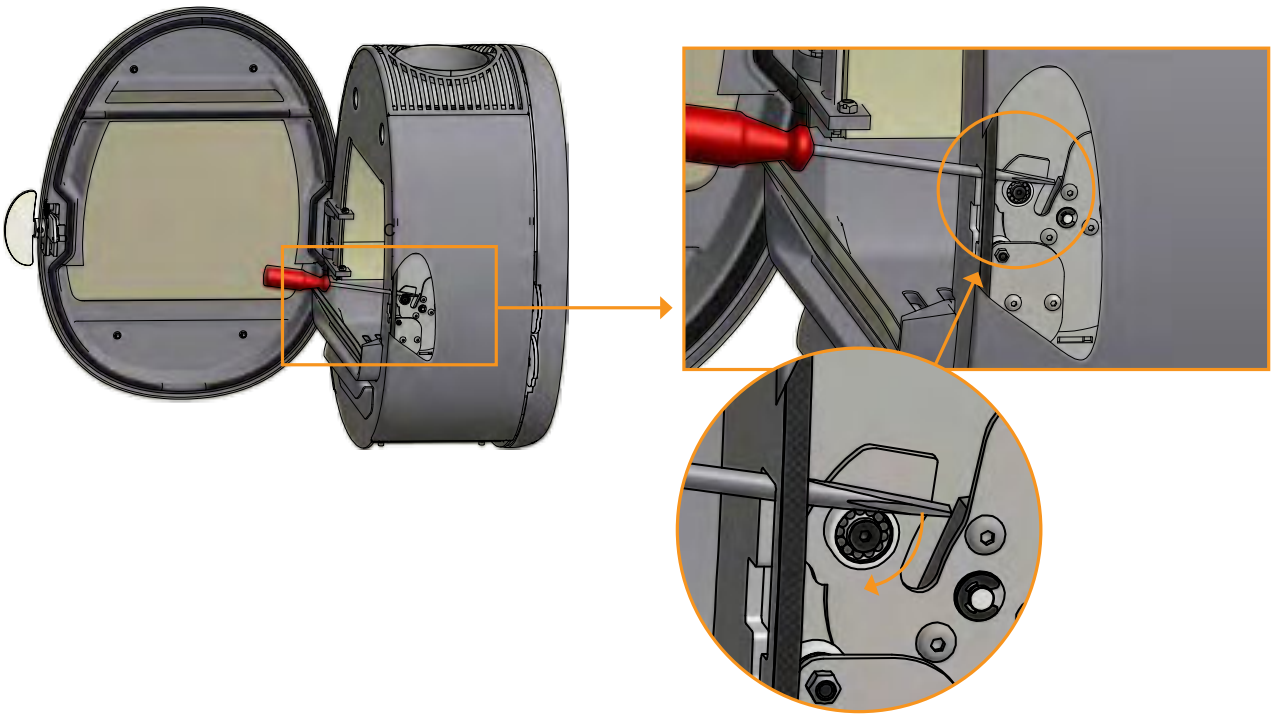

WARRANTY

All wood-fired Scan products are made of high-quality materials and subject to strict quality controls before leaving the factory. We give a warranty of 5 years on manufacturing errors or defects.

You must quote your stove's product registration number when you contact us or your authorized Scan dealer with a warranty claim.

The warranty covers all parts which in the opinion of Scan A/S require repair or replacement due to manufacturing or construction error

The warranty applies to the original purchaser of the product only, and is not transferable (except on prior sale).

The warranty covers only damage caused by manufacturing or construction errors.

THE FOLLOWING PARTS ARE NOT COVERED BY THE WARRANTY

- Wear and tear parts, such as the combustion chamber liners, baffle plates, riddling grate, glass, and seals (except for defects which were present on delivery)
- Defects caused by external chemical and physical influences during transportation, storage and assembly, or at a later time.
- Soot build-up caused by poor chimney draught, damp wood, or improper use
- Costs of additional heating in connection with a repair
- Transport costs
- Costs for setting up, removing the wood stove

THIS WARRANTY IS VOID

- In case of incorrect installation (the installer is responsible for observing and complying with legal requirements and local bylaws, along with this Instructions manual for the wood-burning stove and accessories)
- In case of improper use, and/or use of prohibited fuels, non-original spares (see this instructions manual)
- If the product registration number of the stove has been removed or damaged
- In case of repairs that do not comply with our instructions or instructions by an authorized Scan dealer
- In case of any manipulation of the original state of this Scan product or its accessories. Any unauthorized modification of the stove may not be carried out
- This warranty is only valid in the country to which this Scan product was originally supplied

Always use original replacement parts, or parts recommended by the manufacturer.

NOTES

Product registration number

Quote this number at all enquiries

Jøtul AS | Postboks 1411 | 1602 Fredrikstad, Norway | www.scan-stoves.com

Edition:
UK 90066500
10056056-P07
03.06.2026