UK SCAN 87

UK - ASSEMBLY AND INSTRUCTIONS MANUAL

SCAN 87

ASSEMBLY AND INSTRUCTIONS MANUAL SCAN 87

CONGRATULATIONS ON YOUR NEW SCAN WOOD-BURNING STOVE

You have purchased a product by one of Europe's leading manufacturers of wood-burning stoves, and we are sure that you will have years of pleasure from your purchase.

To make the best possible use of your stove, it is important that you follow our advice and instructions. Read through this Assembly and Instruction Manual carefully before you start to assemble your stove.

SCAN 87
FLOOR

TABLE OF CONTENTS

TECHNICAL DATA 4

Installation 4
Safety 4
CO monitor 4
Technical data 5
Type plate 7
Product registration number 7
Dimension sketch 8
Minimum distances 9

ASSEMBLY 11

Tools needed for mounting of the stove 11
Loose parts 11
Additional accessories 11
Disposal of packaging 11
Room requirements 11
Fresh air intake 11
Closed combustion system 12
Existing chimney and pre-fabricated element chimney 12
Connection between stove and steel chimney 12
Requirements for chimney 13
Requirements for insulated chimney 13
Safety distance 13
Removal of packaging 14
Fitting the slingbar 16
Removal of transport safety 16
Door (Self-closing) 17
Height adjustment of stove 18
Fitting the flue connection piece 20
Disassembly of top plate in top outlet 22
Mounting of cleansing lid 22
Heat-storage system 23
Mounting of combustion chamber 24
Load-bearing foundation 26
Floor plate 26

INSTRUCTIONS FOR USE 27

CB-technology (Clean Burn) 27
Primary air 27
Secondary air 27
Baffle plate 27
Ash container 27

IINSTRUCTIONS FOR HEATING 29

Environmentally-friendly firing 29
Lighting 29
Continuous operation 30
Warning about over-firing 30
Using the stove in various weather conditions 30
Firing in the spring or autumn 30
The function of the chimney 30
Chimney fire 31
General notes 31

HANDLING OF THE FUEL 32

Selecting wood/fuel 32
Preparation 32
Storing 32
Moisture 32
Use of the following as fuel is illegal 32
Calorific value of the wood 32

MAINTAINANCE 33

Sweeping the chimney and cleaning the stove 33
Checking the stove 33
Servicing 33
Combustion chamber lining 34
Gaskets 34
Painted surfaces 34
Removal of baffle plates and combustion chamber lining 35
Disposal of stove parts 35
Cleaning the glass 36

TROUBLESHOOTING 38

WARRANTY 41

TECHNICAL DATA

INSTALLATION

- The house owner is responsible for ensuring that installation and assembly are in accordance with national and local building regulations as well as the information provided in this Assembly and Instruction Manual
- When you install any kind of fireplace or stove, you must inform the local building and housing authorities. In addition you are obliged to have the installation inspected and approved by a local chimney sweep prior to commissioning
- To ensure best-possible functionality and safety for your installation, we advise you to call a professional fitter. Your Scan Dealer will be able to recommend a qualified fitter in your area. For information on Scan Dealers, please go to www.scan-stoves.com

SAFETY

Any changes made to the product by the dealer, fitter or user could result in the product and safety functions not functioning as intended. The same applies to the fitting of accessories or extra equipment not supplied by Scan A/S. This could also be the case if parts that are necessary for the operation and safety of the stove are dismantled or removed.

CO MONITOR

An approved CO monitor should be fitted in the same room as the appliance.

PLEASE NOTE!

YOU GET THE BEST USE OF
THE STOVE BY USING
A TOP-DOWN
LIGHTING METHOD

SEE
"INSTRUCTIONS FOR HEATING"

Test in compliance with EN 16510			
	Classification of appliance	Type BE	
P_{nom}	Nominel heat output	11.5	kW
N_{nom}	Energy efficiency at nominel heat output	84	%
$N_{s\ nom}$	Seasonal space heating energy efficiency at nominel heat output	74	%
EEI	Energy efficiency index	112	
	Energy efficiency class	A+	
	Fuel	Wood*	
	Fuel length, maximum (vertical position)	400**	mm
$M_{h\ nom}$	Fuel consumption	3.2	kg/h
	Amount of fuel	2.6	kg
	Amount of fuel, maximum	4.8	kg
CO_{nom}	CO emission at 13% O_2 at nominel heat output	0.073 906	% mg/Nm^3
$NO_{x\ nom}$	NO_x emission at 13% O_2 at nominel heat output	97	mg/Nm^3
OGC_{nom}	OGC emission at 13% O_2 at nominel heat output	51	mg/Nm^3
PM_{nom}	Dust emission at 13% O_2 at nominel heat output	27	mg/Nm^3
p_{nom}	Flue draught at nominel heat output	12	Pa
	Recommended sub-pressure in the connecting piece	18-20	Pa
	Required combustion air supply	39	m^3/h
$T_{fg\ nom}$	Flue gas temperature at nominal heat output	166	°C
$T_{s\ nom}$	Temperature in the flue connecting piece at nominal heat output	208	°C
T class	Chimney designation	T400	
$Ø_{f.g\ nom}$	Flue gas mass flow at nominal heat output	13.2	g/sec
V_h	Standing air loss	0	m^3/h
CON/INT	Continuous operation (CON)/Intermittent operation (INT)	INT***	
	Reaction to fire classification	A1	

* Use only recommended fuels - designation I.

** The stove can take logs up to 50 cm (vertically placed).

*** Intermittent operation in this context means normal use of a wood-burning stove. In other words, you should let the fire die down until only the embers are left before refueling.

Basic technical data			
	Materials	Stainless steel Cast iron Ceramic stone/vermiculite Glass	
	Surface treatment	Senotherm	
d_{out1}	Connecting piece int. diameter for outside flue pipe	186	mm
d_{out2}	Connecting piece ext. diameter for outside flue pipe	190	mm
d_{out3}	Connecting piece int. diameter for inside flue pipe	194	mm
d_{out4}	Connecting piece ext. diameter for inside flue pipe	198	mm
	Fresh air connection piece external diameter	125	mm
L	Overall dimensions (length)	630	mm
H	Overall dimensions (height)	1886	mm
W	Overall dimensions (width)	699	mm
m	Mass (weight)	approx. 273	kg
m_{chim}	Maximum load of a chimney the stove may carry	120	kg

Minimum distances to combustible materials			
d_R	Back (uninsulated/insulated flue pipe)	100/50	mm
d_S	Sides	800	mm
$d_{S(C)}$	Sides - corner distance	300	mm
d_C	Ceiling	500	mm
d_P	Front	1300	mm
d_F	Front to the bottom front radiation area	0	mm
d_L	Front to the side front radiation area	0	mm
d_B	Below the bottom (not regarding feet)	0	mm
d_{non}	Minimum distances to non-combustible walls	50	mm

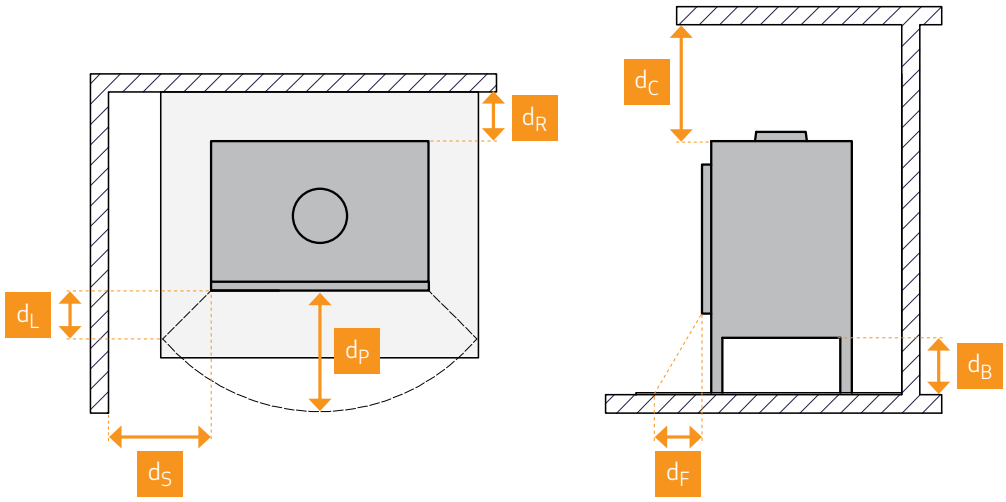

This stove is produced in accordance with type approval for the product, which also covers the product's Assembly and Instruction Manual. Read and follow the user operating instructions carefully.

The Declaration of Performance (DoP) is available from www.scan-stoves.com.

TYPE PLATE

All Scan wood-burning stoves are fitted with a type plate that specifies the approval standards and the distance to flammable materials.

The type plate is located at the rear of the stove.

Type plate

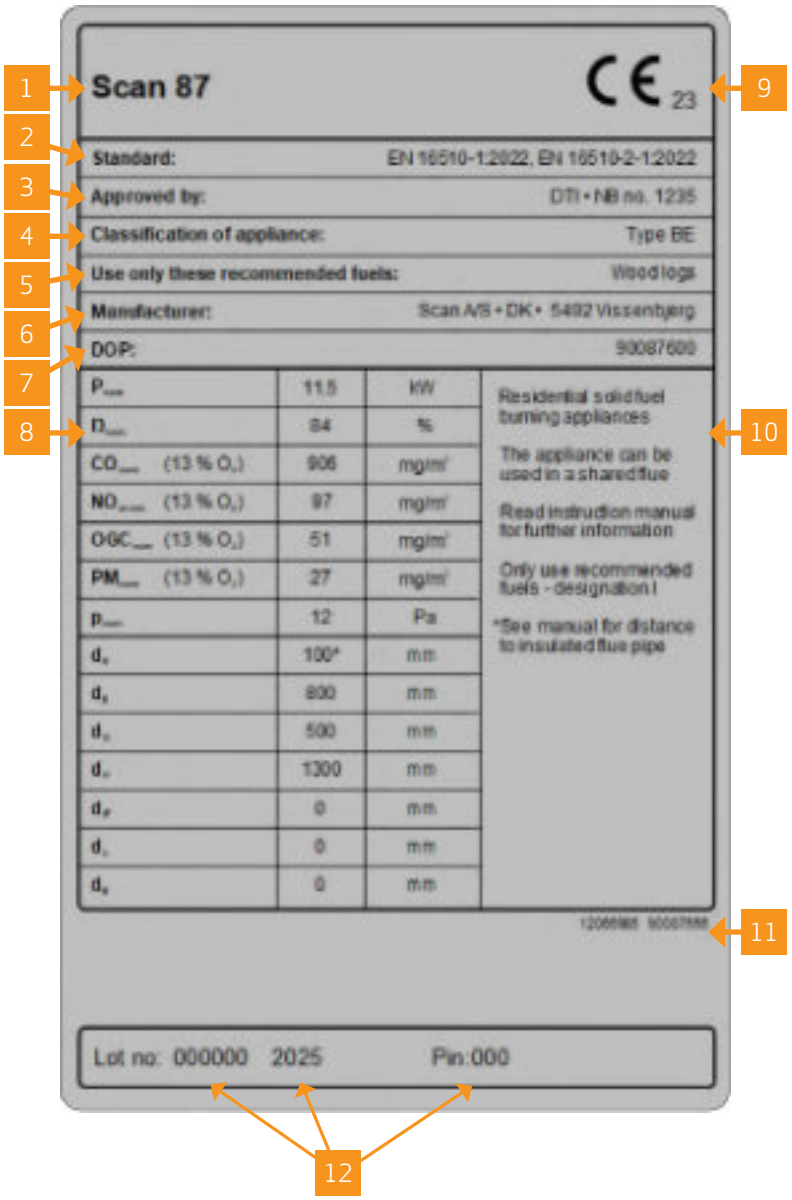

TYPE PLATE EXPLANATION

1. Type and/or the model number or designation to enable the appliance to be identified
2. Applicable standards
3. Name of test centre/certification number
4. Classification of appliance
5. Recommended fuels
6. Manufacturer's name and address
7. DOP document number
8. Table of values:

   P_{nom} - nominel heat output

   N_{nom} - energy efficiency at nominel heat output

   CO_{nom} - CO emission at 13 % O_2 at nominel heat output

   NO_{xnom} - NO_x emission at 13 % O_2 at nominel heat output

   OGC_{nom} - OGC emission at 13 % O_2 at nominel heat output

   PM_{nom} - dust emission at 13 % O_2 at nominel heat output

   p_{nom} - flue draught at nominel heat output

   Minimum distances to combustible material:

   d_R - back

   d_S - sides

   d_C - ceiling

   d_P - front

   d_F - front to the bottom front radiation area

   d_L - front to the side front radiation area

   d_B - below the bottom (not regarding feet)
9. CE mark of conformity - The digits indicate the year of issue of the certificate
10. Product specifications and instructions
11. Type plate number
12. Product registration number

PRODUCT REGISTRATION NUMBER

All Scan wood-burning stoves are provided with a product registration number. This is unique to your stove and may need to be referred to when you contact Scan A/S or your dealer, e.g. for service or ordering spare parts.

We recommend taking a picture of the type plate and saving it digitally, or writing the number down in a safe place – e.g. together with your housing documents.

DIMENSION SKETCH

Scan 87 - freestanding

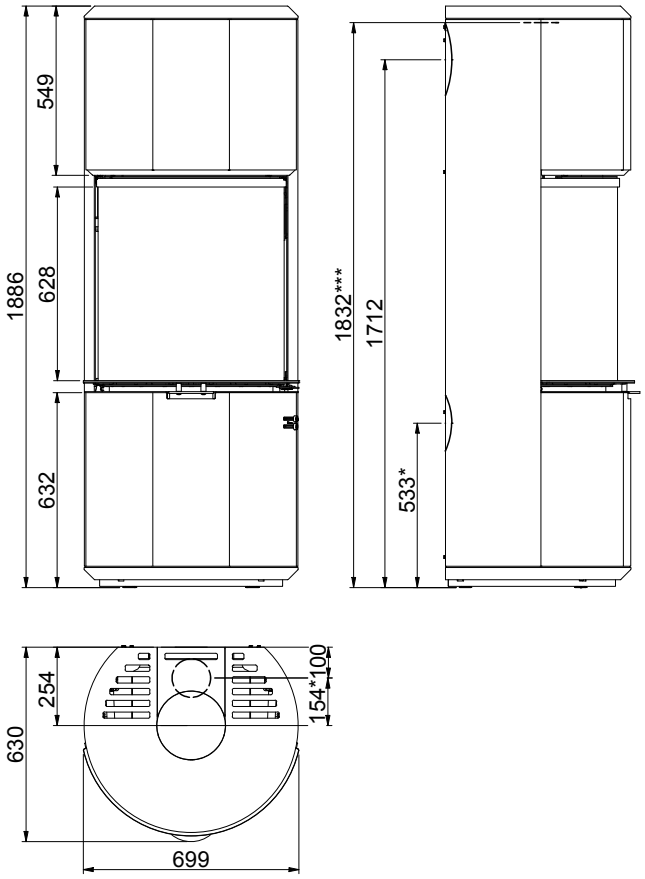

All distances are in mm.
All distances are minimum distances
* Connection of fresh-air intake Ø 125 mm
*** Height to the beginning of flue connecting piece at top outlet

MINIMUM DISTANCES

Minimum distance to flammable materials

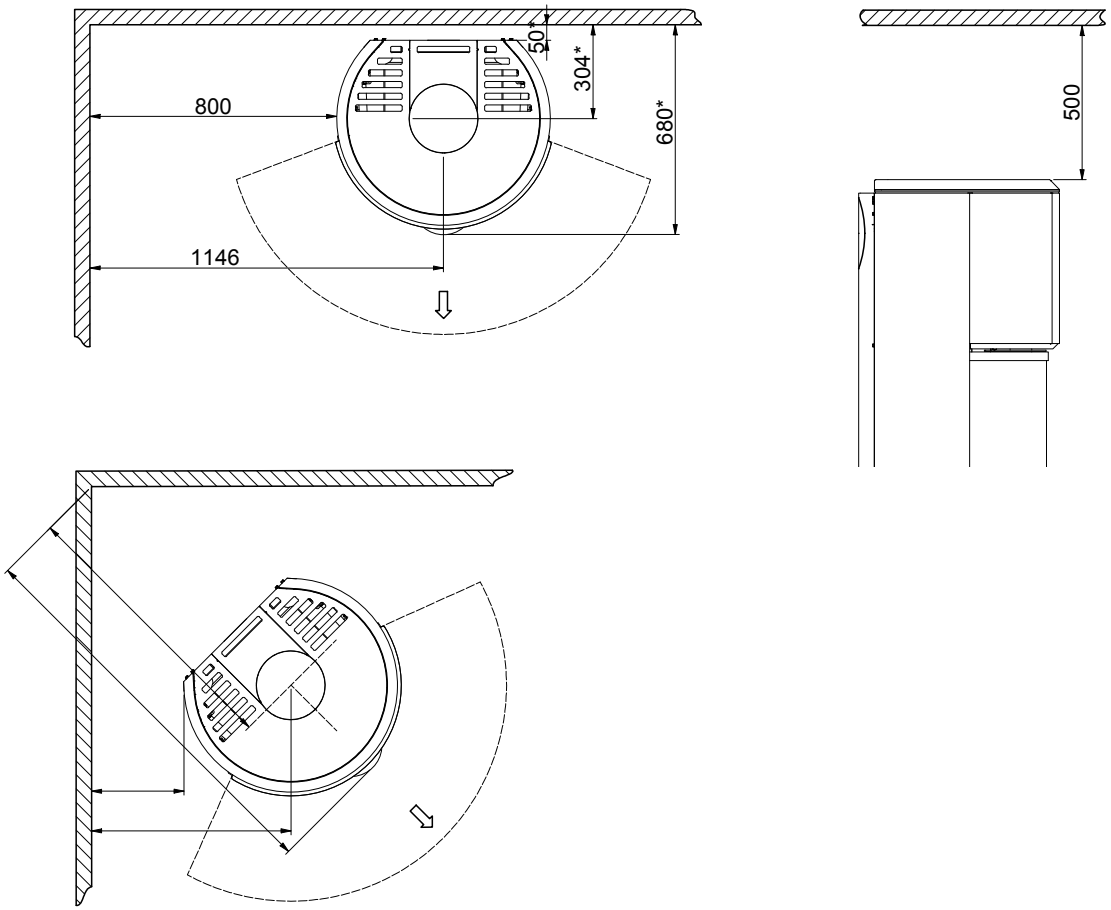

Flammable material

Fire wall, e.g. 50 mm Jøtul Firewall, 110 mm brick or other material with corresponding fireproof and insulating abilities

All distances are in mm.
All distances are minimum distances
* Half-insulated chimney / shielded flue pipe (The requirements to the chimney and the flue pipe in terms of safety distances must be met)

Minimum distance to flammable wall protected by a fire wall

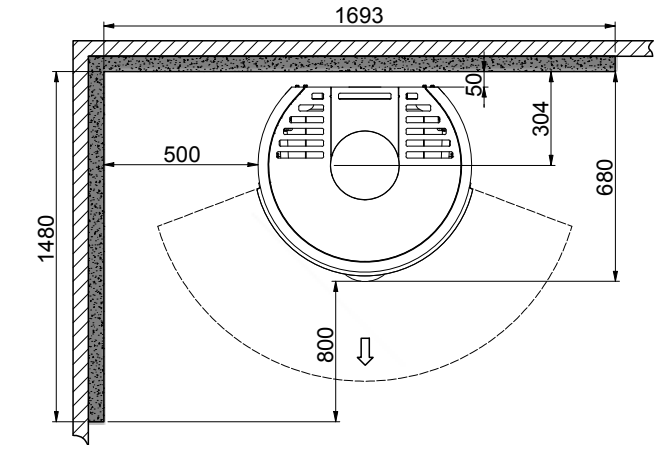

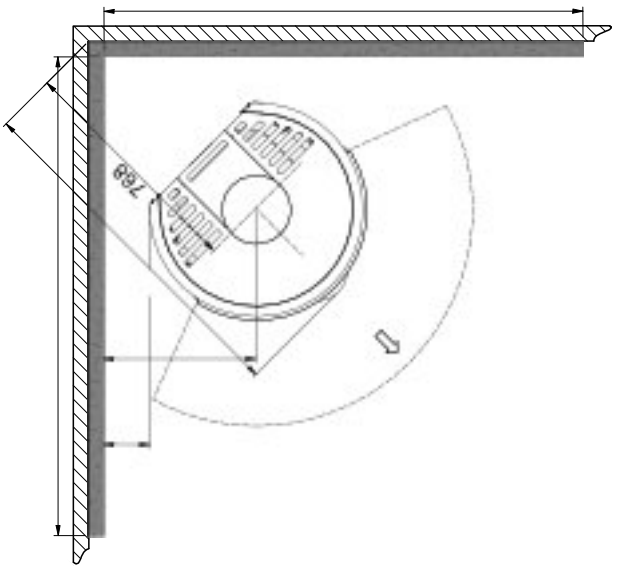

Flammable material

Fire wall, e.g. 50 mm Jøtul Firewall, 110 mm brick or other material with corresponding fireproof and insulating abilities

All distances are in mm.
All distances are minimum distances
* Half-insulated chimney / shielded flue pipe (The requirements to the chimney and the flue pipe in terms of safety distances must be met)

ASSEMBLY

TOOLS NEEDED FOR MOUNTING OF THE STOVE

- Spirit level
- Cutting nippers
- Combo wrench 10 mm
- 3 allen keys (2,5 mm, 4 mm & 5 mm)

LOOSE PARTS

In the stoves combustion chamber you will find the following loose parts:

- Glove
- 1 flue connection piece 180 mm (int. flue pipe)
- Seal for the connecting piece
- Top back plate
- Baffle plates
- Slingbar
- 1 connecting piece for fresh air inlet
- 1 flue connection piece 190/200 mm (int./ext. flue pipe)
- Dekor plate for top plate
- Screw M5x16 mm (Only used in Norway)
- 2 pins for baffle plates

ADDITIONAL ACCESSORIES

- Small shaped floor plate in glass
- Heat accumulating stones (6 items approx. 100 kg)
- Large shaped floor plate in glass
- Cleansing lid

DISPOSAL OF PACKAGING

Your Scan stove may come supplied with the following packaging:

Wood packaging	The wood packaging can be reused and after final use can be incinerated as a CO_2 neutral product or sent for recycling
Foam	Send for recycling or waste disposal
Plastic bags	Send for recycling or waste disposal
Stretch/plastic film	Send for recycling or waste disposal

ROOM REQUIREMENTS

The stove must be installed in rooms with a good ventilation. A good ventilation is vital for the efficient operation of your stove.

We recommend installing smoke detectors in the home.

The distances specified in the manual only apply if you comply with the maximum amount of firewood. They only guarantee fire safety.

You should however assess whether furniture or other items might become excessively dry due to being too close to the stove. There is no guarantee that the present building materials can withstand the temperature in relation to visual changes.

- Check that Building Regulations and any local by laws are followed during installation

FRESH AIR INTAKE

In a well-insulated house, the air used up by the burning process has to be replaced. This particularly applies to houses with mechanical ventilation. There are different ways of making sure that an air exchange takes place. The most important thing is to ensure that there is a supply of air to the room where the wood stove is located. The external wall vent must be located as close to the wood stove as possible, and you must be able to close it when you are not using the wood stove.

National and local building regulations must be followed with regard to the connection of fresh-air intake.

CLOSED COMBUSTION SYSTEM

You should use the closed combustion system for the wood-burning stove if you live in a newly-built, airtight home. External combustion air is connected through a ventilation pipe via the wall or floor.

We recommend mounting a valve in the ventilation pipe in order to avoid condensate in the stove and the pipe system, when the stove is not in use. It can also be an advantage to insulate the ventilation pipe.

Minimum Ø 125 mm ventilation pipe, maximum length: 6 metres with a maximum of one bend. We recommend smooth steel pipes.

Connecting piece for fresh air inlet is loose in the stove.

If the external combustion air is connected at the rear, the dismounted plate must be mounted on the hole for external air in the bottom of the stove. For wall-mounted model (wall) a special fresh air adapter (accessory) is used.

NOTE: if the stove has a fresh air connexion or closed combustion, the ventilation pipe must be open, when the stove is in use!

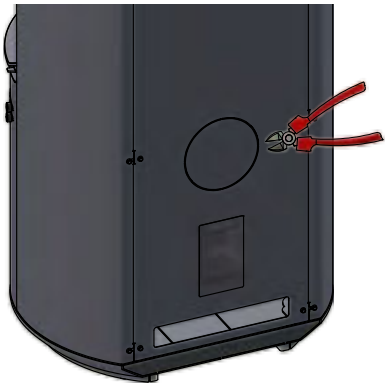

If you want external combustion air via a wall, remove the cover plate at the rear of the stove with a pair of cutting pliers

EXISTING CHIMNEY AND PRE-FABRICATED ELEMENT CHIMNEY

If you intend to connect your stove to an existing chimney, it makes sense to contact an authorised Scan dealer, or a local chimney sweep, for advice. These experts will also let you know if your chimney needs renovating.

- When connecting a pre-fabricated element chimney, follow the manufacturer's connection instructions for the relevant chimney type

CONNECTION BETWEEN STOVE AND STEEL CHIMNEY

Your Scan dealer, or local chimney sweep, can advise you on choosing a make and type of steel chimney. This ensures that the chimney will match your wood-burning stove.

REQUIREMENTS FOR CHIMNEY

The chimney must have a minimum internal diameter of 180 mm (200 mm is recommended) and have a T400 designation, with G for the soot fire test. The length should be min. 4,5 metres.

If the chimney is fitted with a smoke extractor, it must be possible to adjust it to a suitable draft.

The appliance should not be installed in a shared flue.

The requirements to the chimney and the flue pipe in terms of safety distances must be met. The chimney shall be proven according to EN 13384-2:2015+A1:2019 depending on the individual situation on site.

- Choosing the wrong length or diameter of chimney could impair functionality
- Always comply exactly with the instructions provided by the chimney supplier

REQUIREMENTS FOR INSULATED CHIMNEY

The insulation level for insulated chimney: T400-N1-D-Vm-L50050-G100.
The air gap should be 10-15 mm.

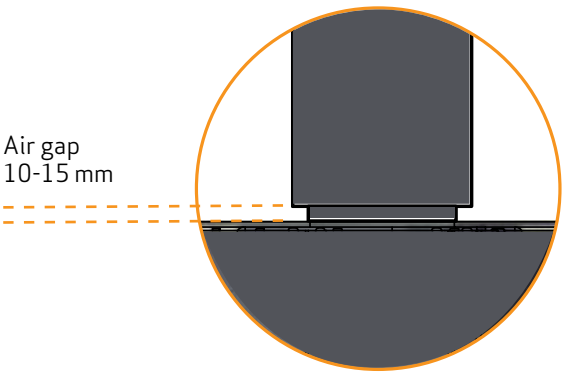

SAFETY DISTANCE

European, national and local regulations concerning safety distances for wood-burning stoves must be complied with.

There are no demands concerning the distance to non-flammable materials, but we recommend a distance of 50 mm in order to facilitate the cleaning of the stove, the flue pipes and the chimney and to prevent possible damages to the wall.

REMOVAL OF PACKAGING

Check that the stove is not damaged before starting to install it.
The stove comes attached to a wooden pallet on delivery. The packaging is stable enough for the unpacked stove to be laid down.

1

2

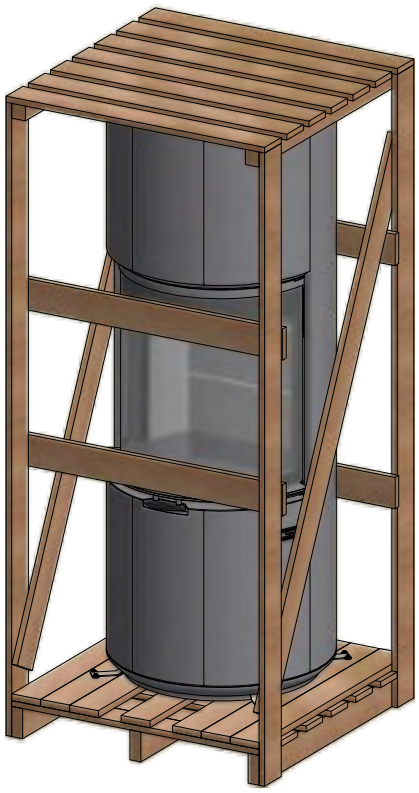

3

4

5

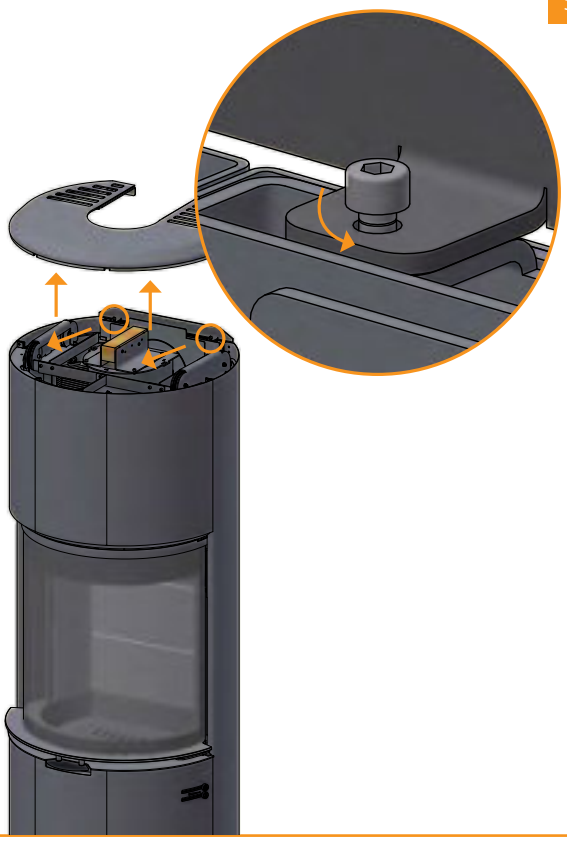

6

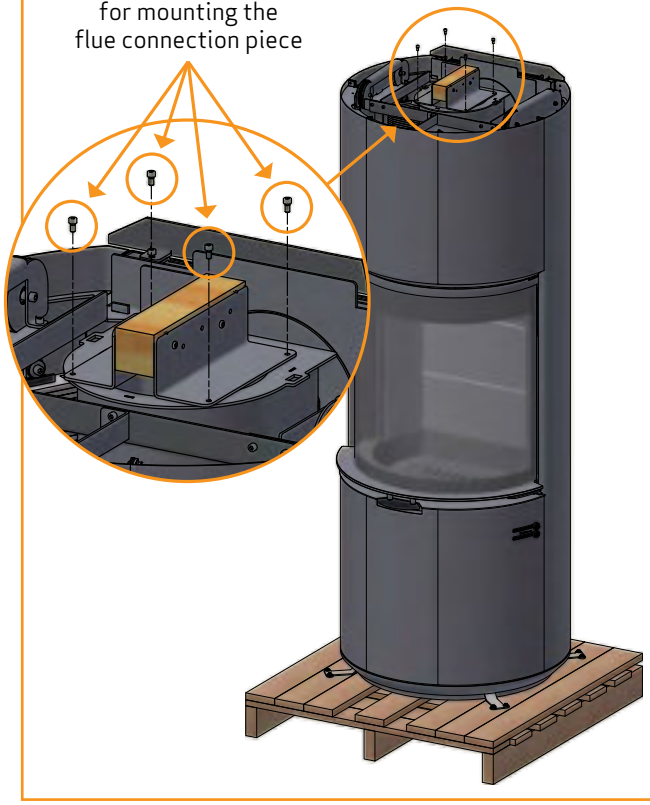

7

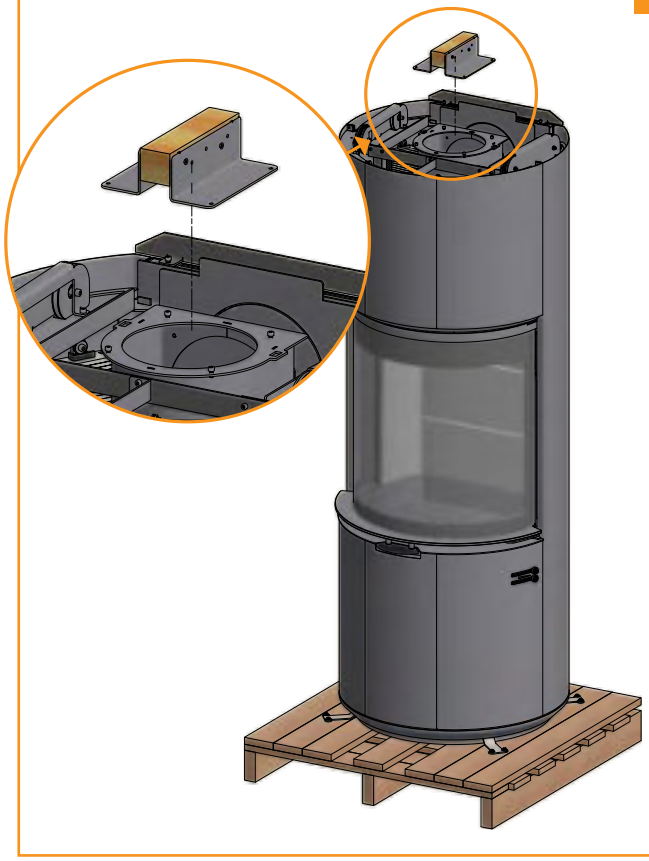

8

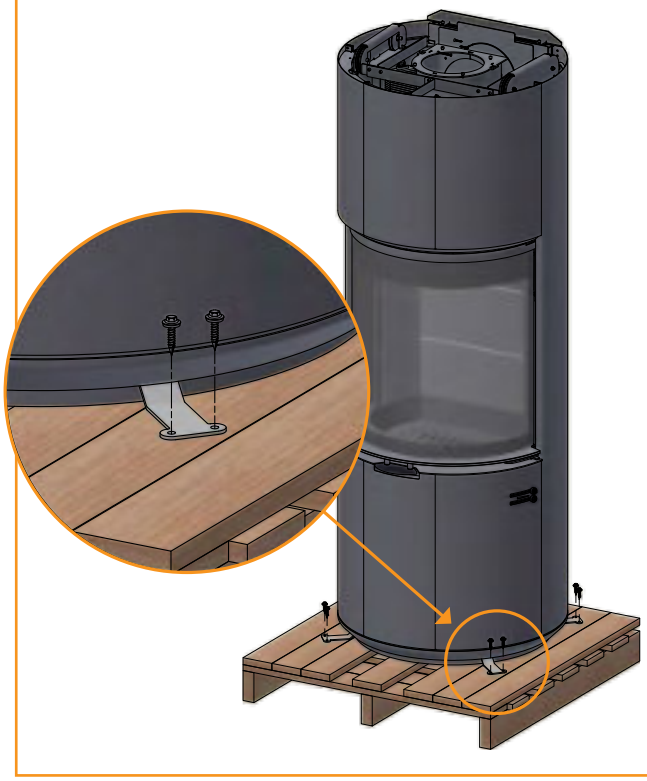

FITTING THE SLINGBAR IN THE TOP OUTLET

If you want to lift Scan 87 with a crane, the included slingbar can be used.

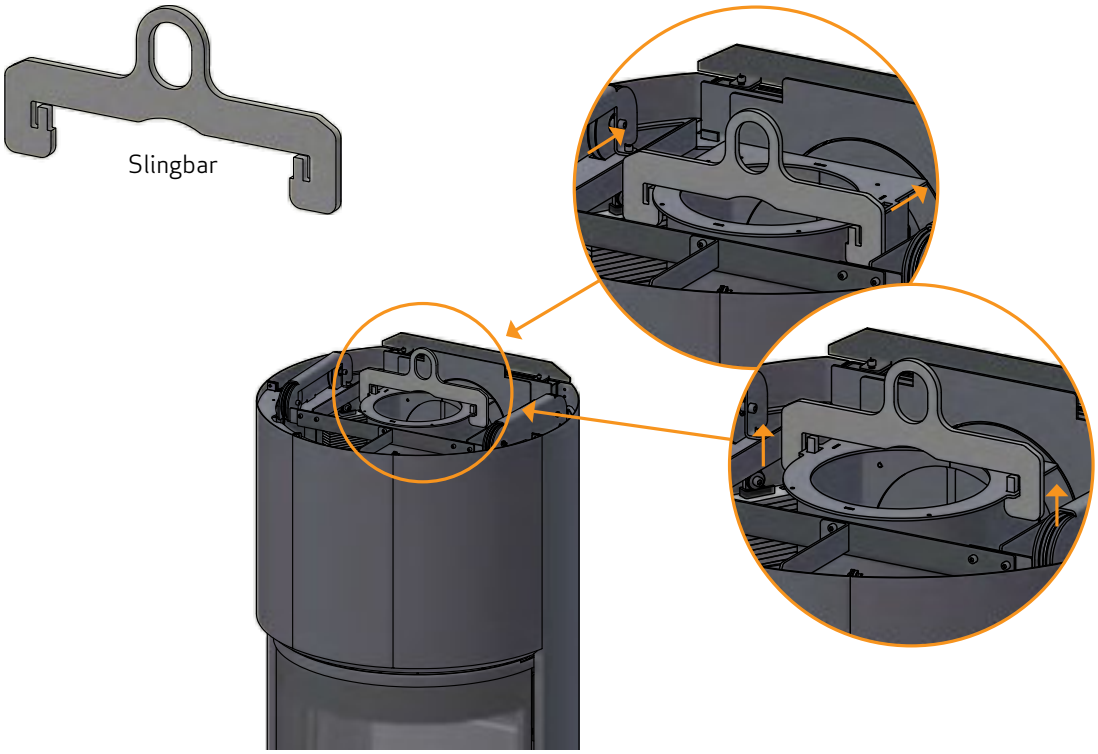

REMOVAL OF TRANSPORT SAFETY

The stove comes with clamped weights.
These must be released when the stove is placed in the right place.

1 Lift the top plate off the stove

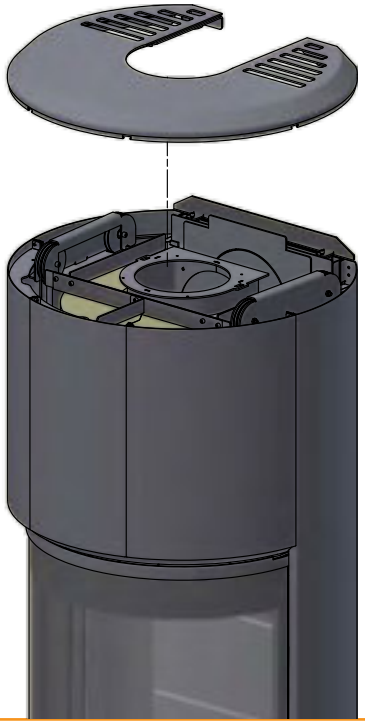

2 Remove 2 screws on each inside of the stove with a 10 mm open-end spanner

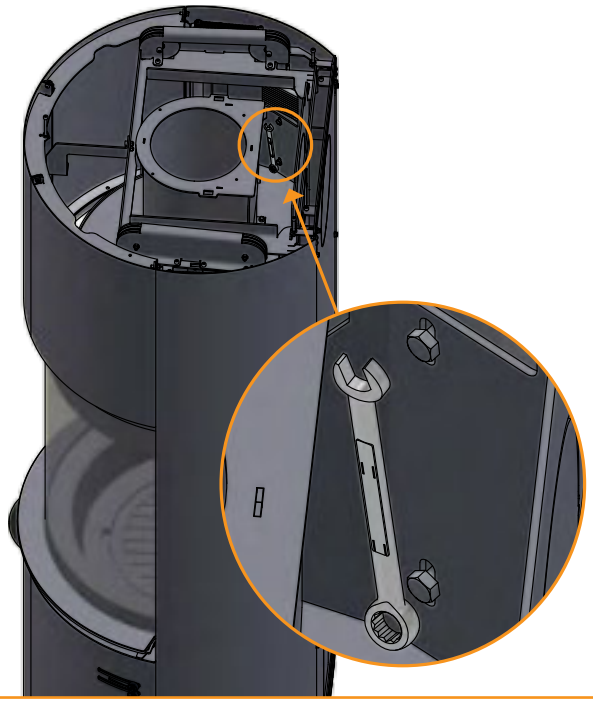

DOOR (SELF-CLOSING)

The door is delivered without self-closing function (Bauart 1). Adjustment is made by removing or adding weights.
If you want a self-closing door, you can remove half of the weight discs in each inside of the stove from the counterweight.

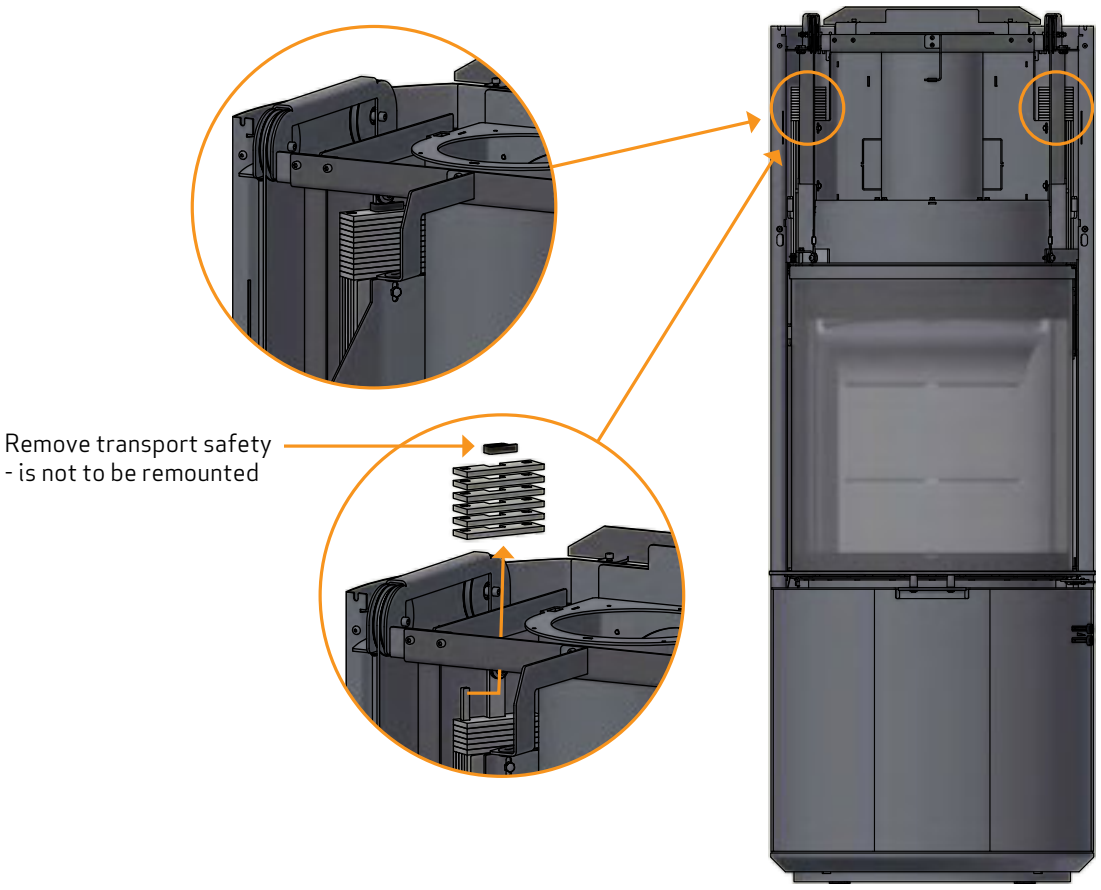

RED DOT LABEL

NOTICE: Remove the Red Dot label before using the stove!

HEIGHT ADJUSTMENT OF STOVE

The stove has four adjustment screws under the stove. Use the adjustment screws to get the stove to stand straight and level.

NOTICE: It is very important that the stove is level to allow an optimal function of the door. Please note that once mounted the stove can no longer be adjusted!

1 Remove the air damper buttons

2 Remove the screws for the cover plate in the base

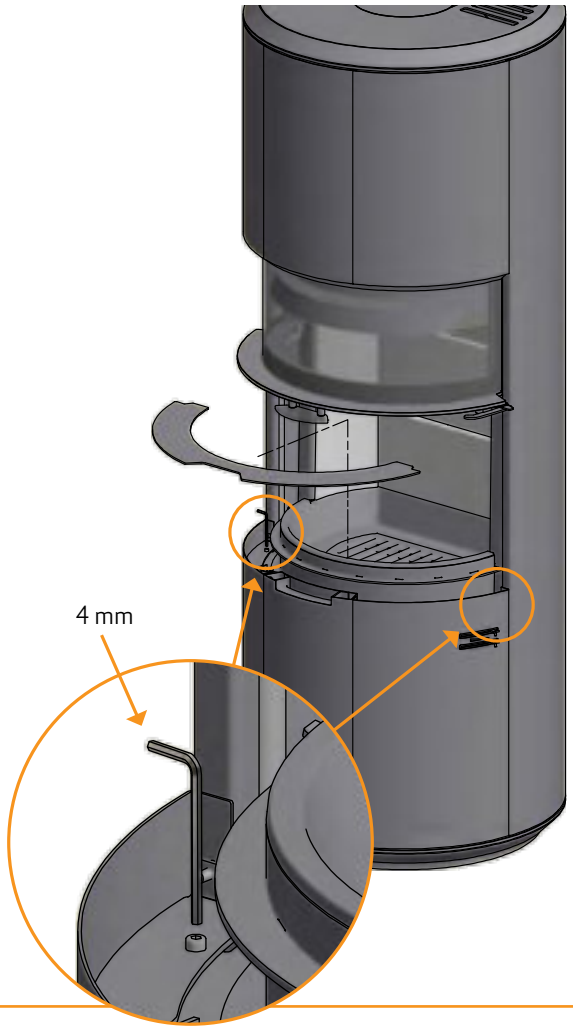

3 Lift off the front of the base

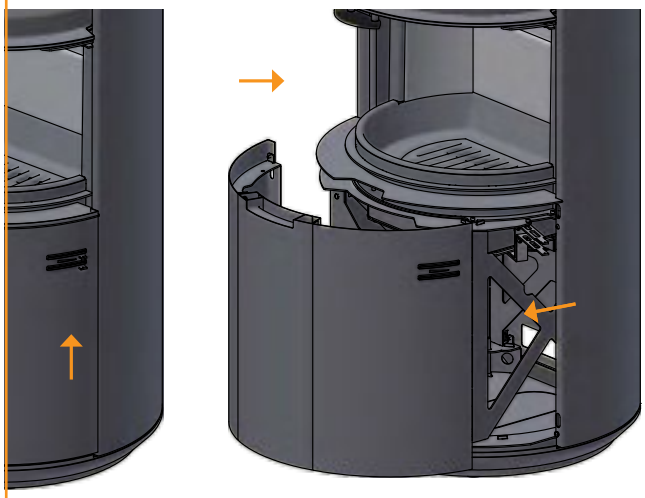

4 Adjust the adjustment screws

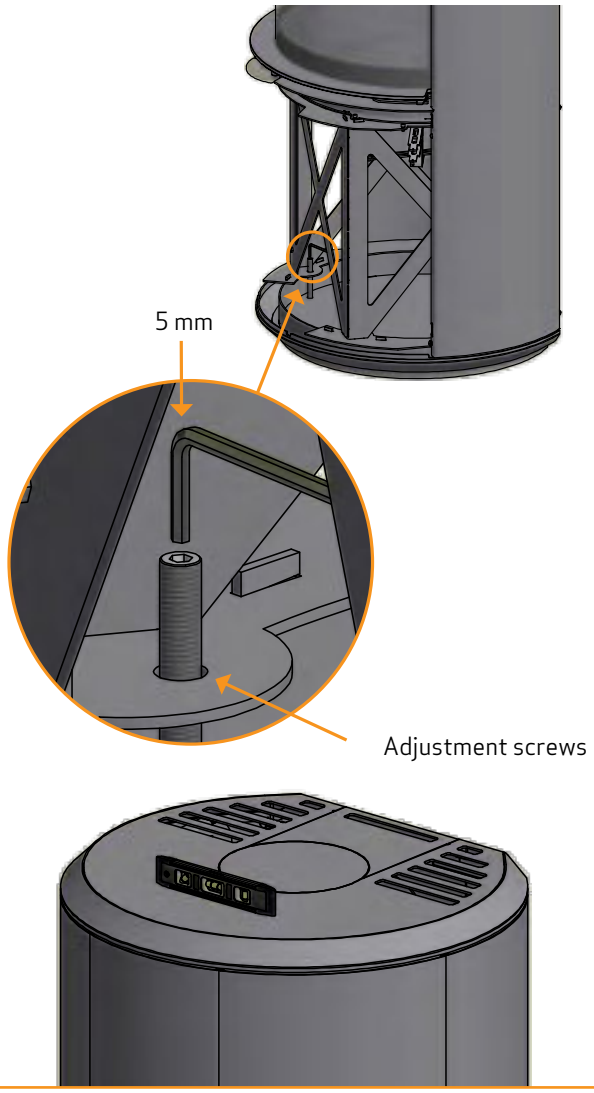

5

Place the front of the base loosely so that the air dampers are placed on each side of the reinforcement. Afterwards place the air dampers into the damper holes

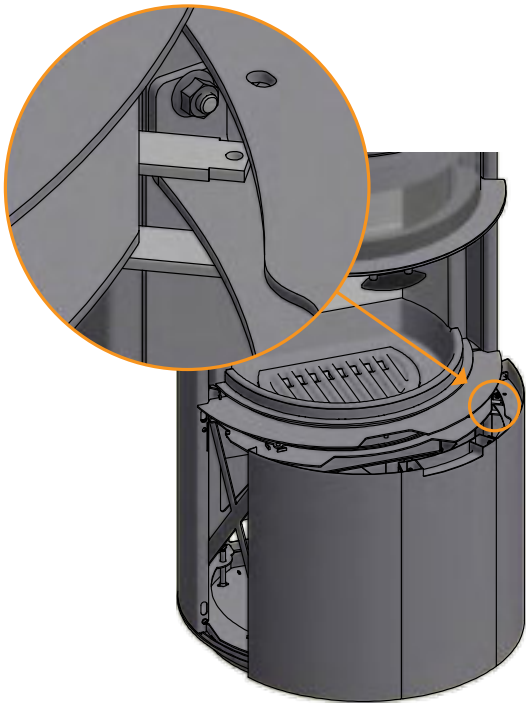

6

Lift the front of the base up and down into place and the air damper buttons can then be put back on

FITTING THE FLUE CONNECTION PIECE IN THE TOP OUTLET

The stove is prepared from the factory for top outlet.

The gasket for the flue connection piece, flue connection piece and screws can be found in the stove's combustion chamber.

1 Loosen screws and lift the top plate off the stove

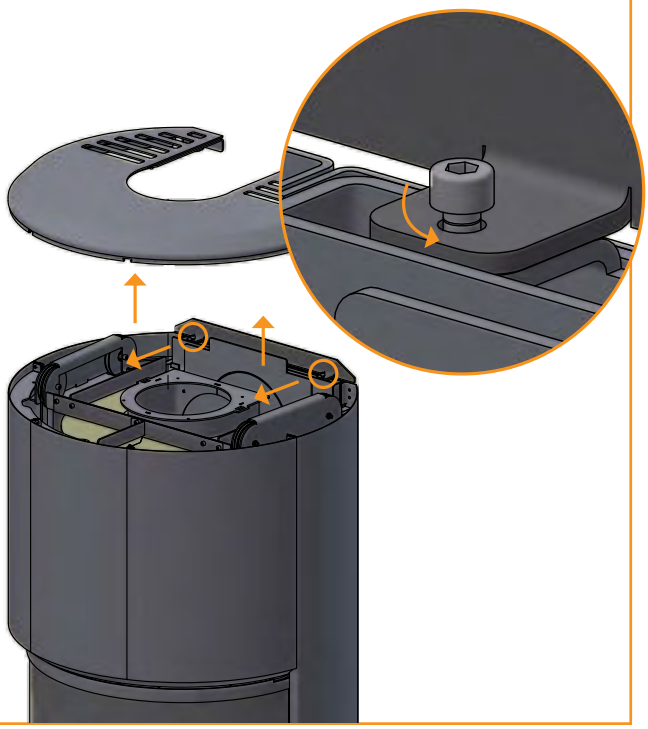

2 Mount the ceramic gasket on the connecting piece

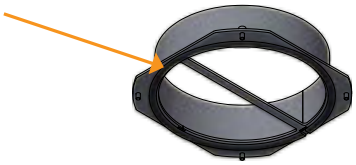

3 Fasten the connecting piece with screws and replace the top plate

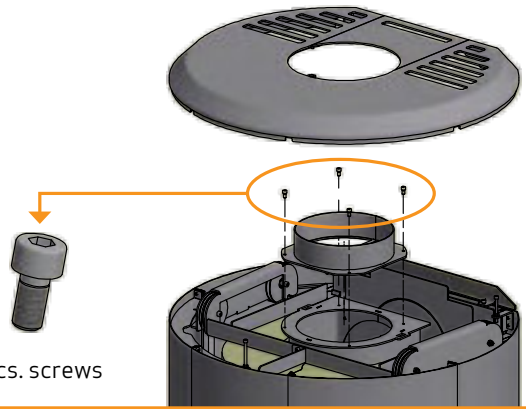

4 pcs. screws

FITTING THE FLUE CONNECTION PIECE IN THE REAR OUTLET

The stove is prepared from the factory for top outlet.

The gasket for the flue connection piece, flue connection piece and screws can be found in the stove's combustion chamber.

1 Loosen screws and lift the top plate off the stove

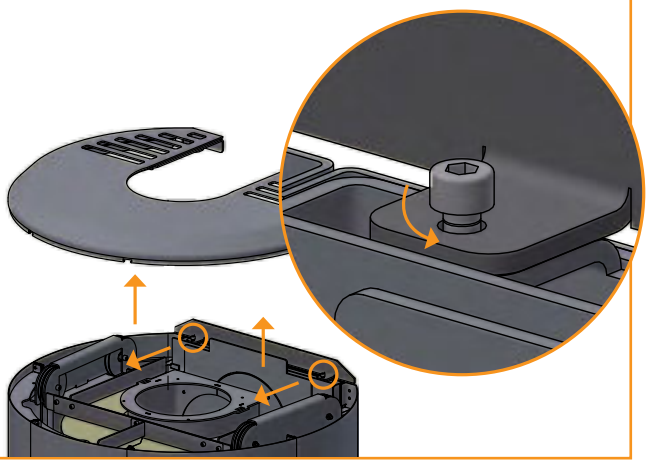

2 Mount the ceramic gasket on the connecting piece

3 Using cutting pliers, cut off the cover plate from the rear plate and at its securing points

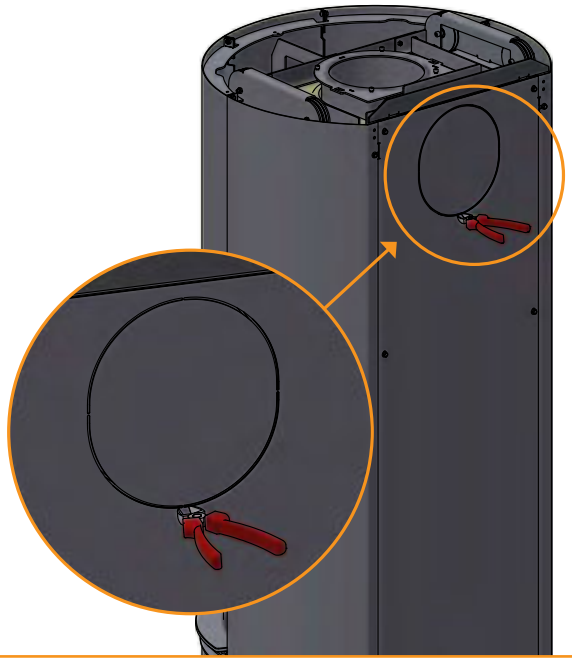

4

Tip the cover plate at the rear outlet and break it off

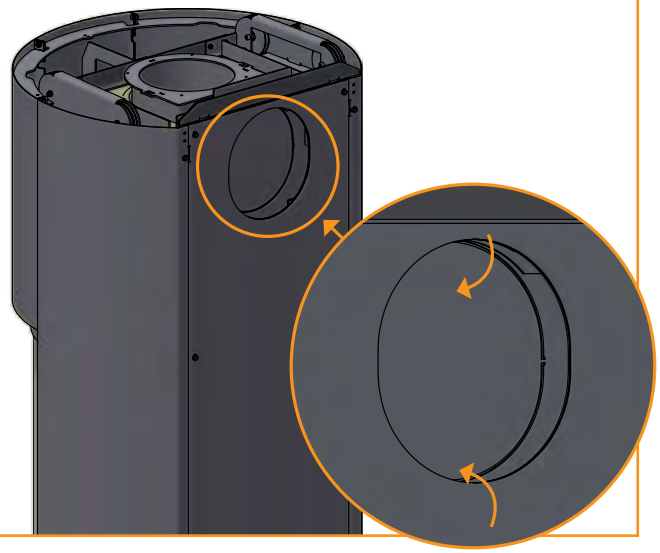

5

Remove the cover.

This is to be used later as a seal and cover at the top of the smoke outlet

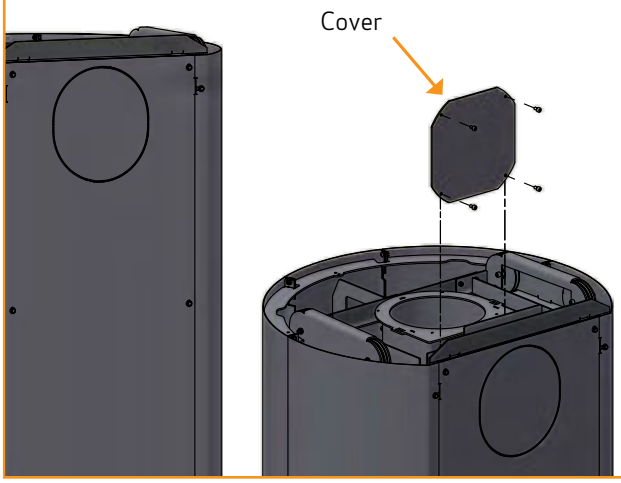

*

To facilitate the work of mounting the connecting piece, the smoke box can be removed by removing the front plate and door stop. Especially with the wall-mounted model, this solution can be an advantage

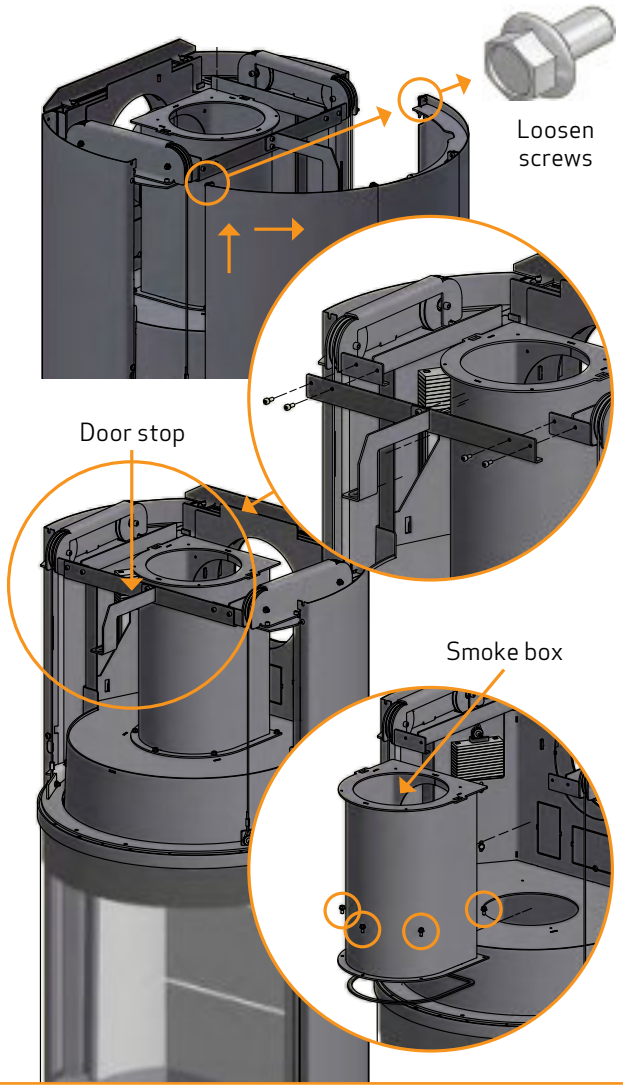

6

Fit the connecting piece with the four screws found in the stove's burnchamber

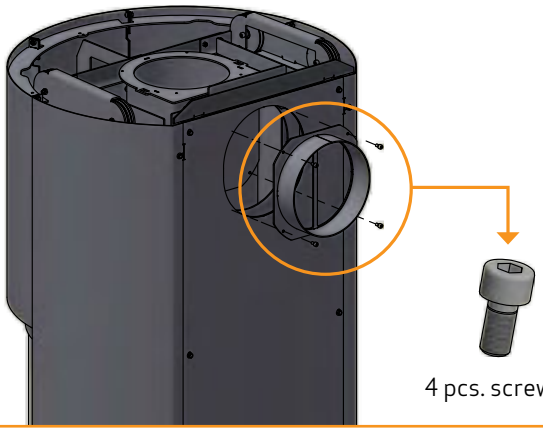

7

Fit the cover and tighten it.

Replace the top plate

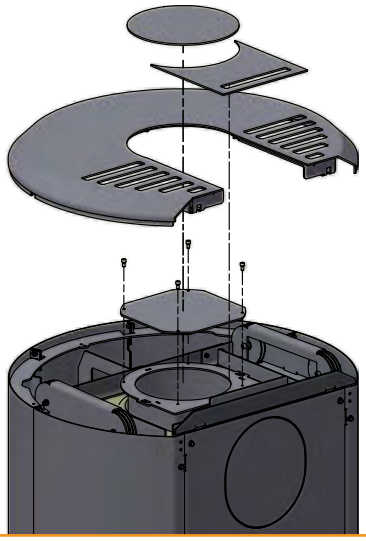

DISASSEMBLY OF TOP PLATE IN TOP OUTLET

From the factory, the top plate is mounted on the rear piece. If you have to remove the top plate when the flue pipe is fitted, it can be removed by loosening the two screws.

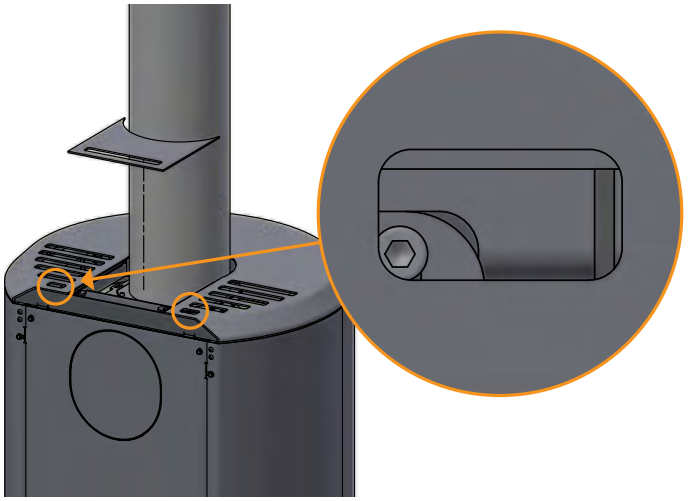

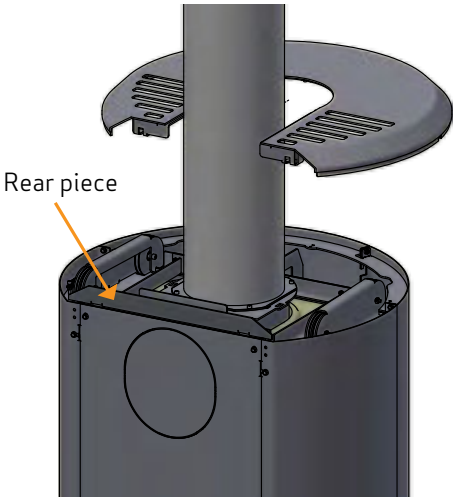

MOUNTING OF CLEANSING LID (ACCESSORY)

For mounting the flue connection piece in the rear outlet a cleaning lid for top outlet can be purchased.

Turn the lid 90 degrees to open the cleansing lid.

HEAT-STORAGE SYSTEM (ACCESSORY)

Heat-storage stones are available for Scan 87.
(6 items approx. 100 kg)

Heat-storage stones are made from a special material with a high heating capacity. The stones are heated up during the firing and gives off the heat again after the firing, which means that the stove stays warm for a longer time.

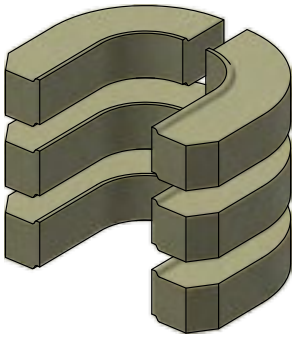

Heat-storage stones

1

Lift off the top plate from the stove.
Loosen two screws and remove the front plate

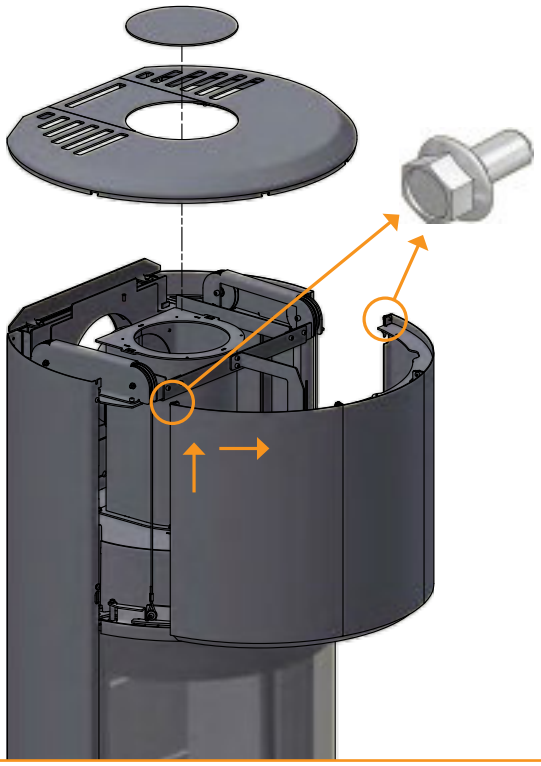

2

Dismount the door stop

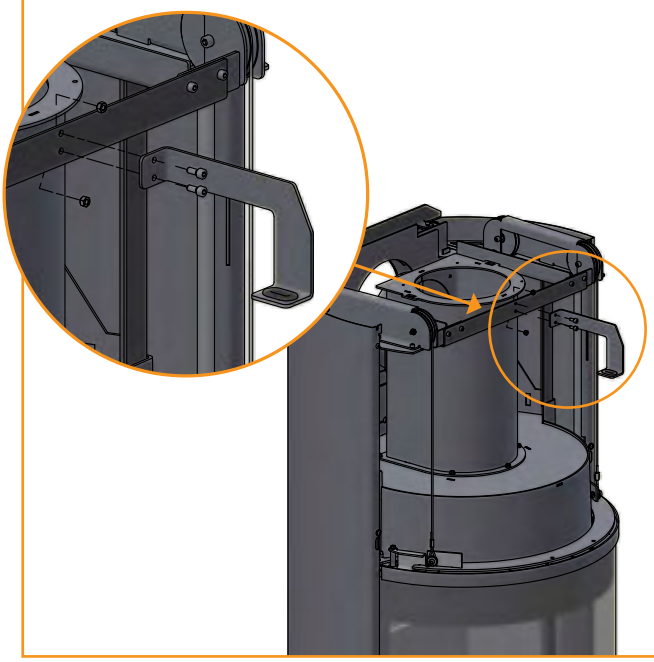

3

Mount the six stones

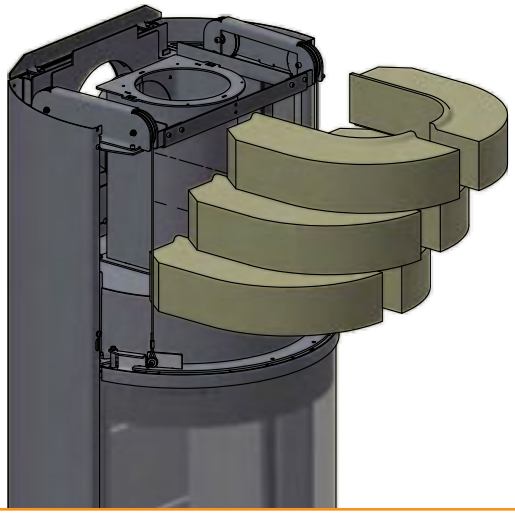

4

Remount door stop, top and front plate

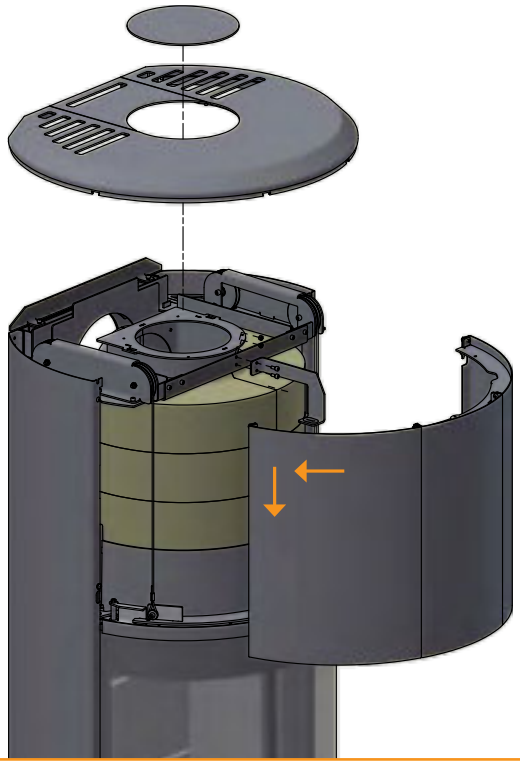

MOUNTING OF COMBUSTION CHAMBER

Note that the baffle plates are made of porous, ceramic material, and can break.
Exercise care when working

1

Place the upper baffle plate in the top of the stove. It is important that the plate is placed correctly

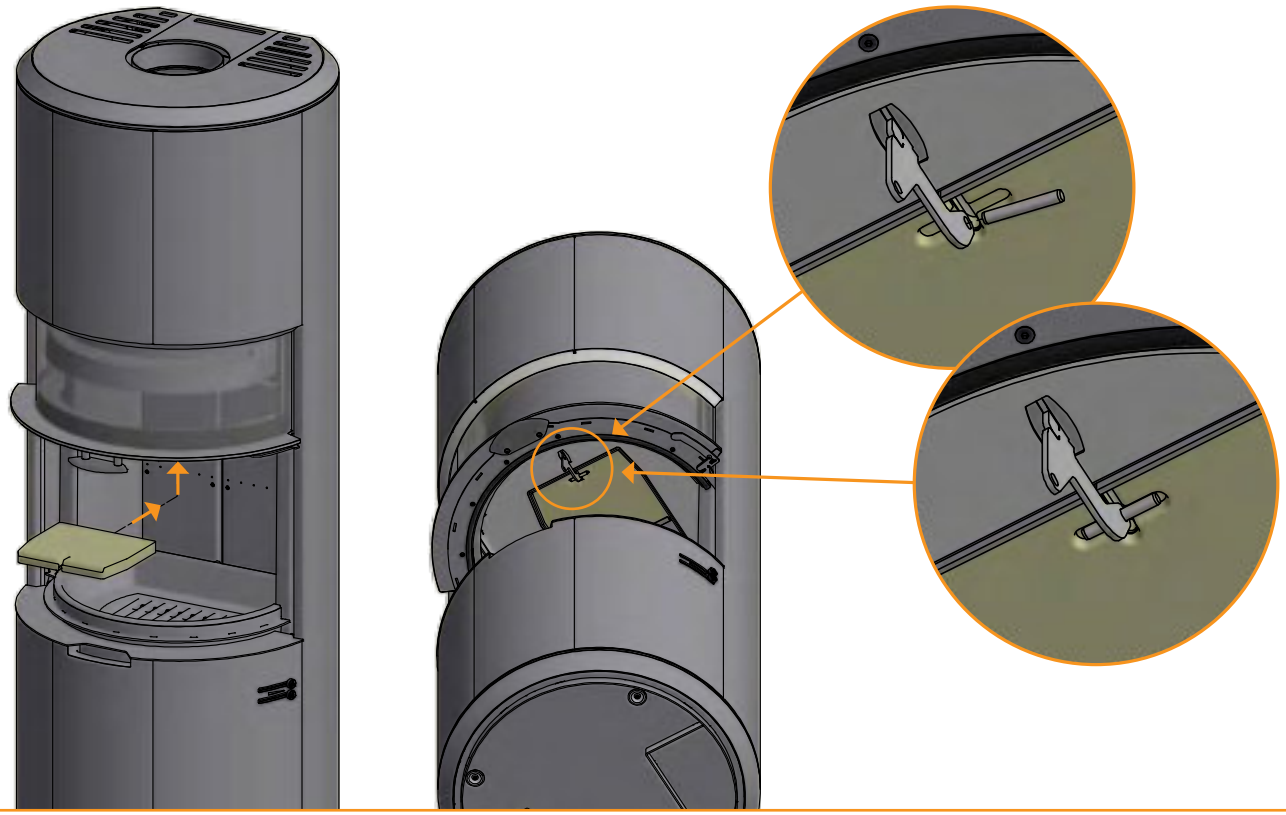

2

Mount the right burn chamber plate

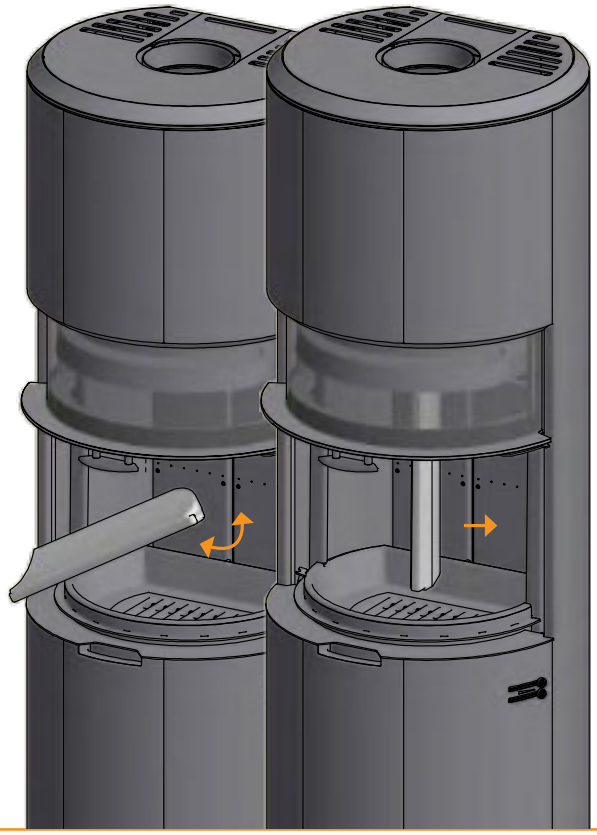

3

Mount the lower rear plate

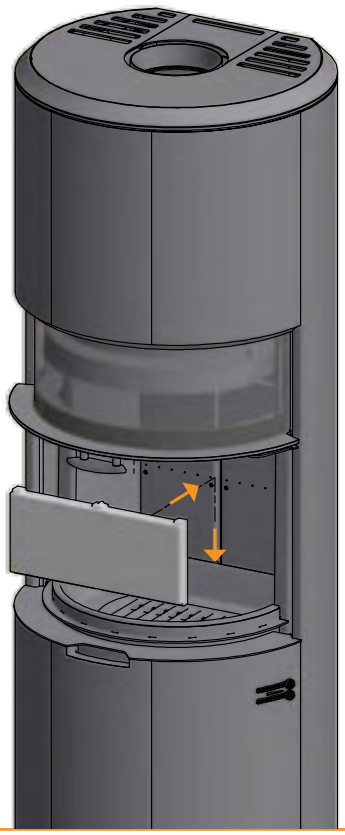

Mount the center rear plate 4

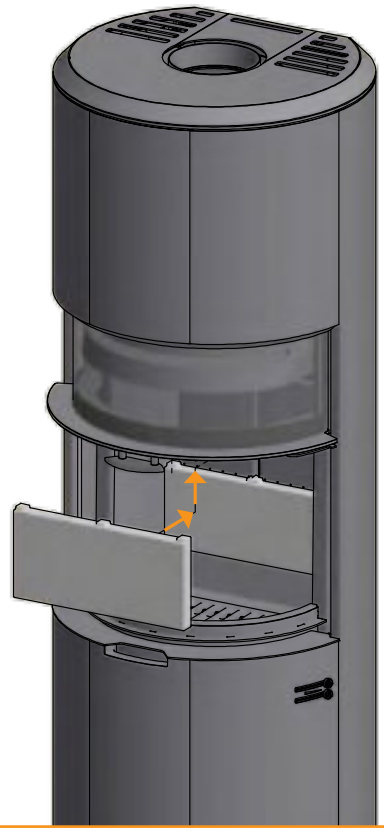

Mount the left burn chamber plate 5

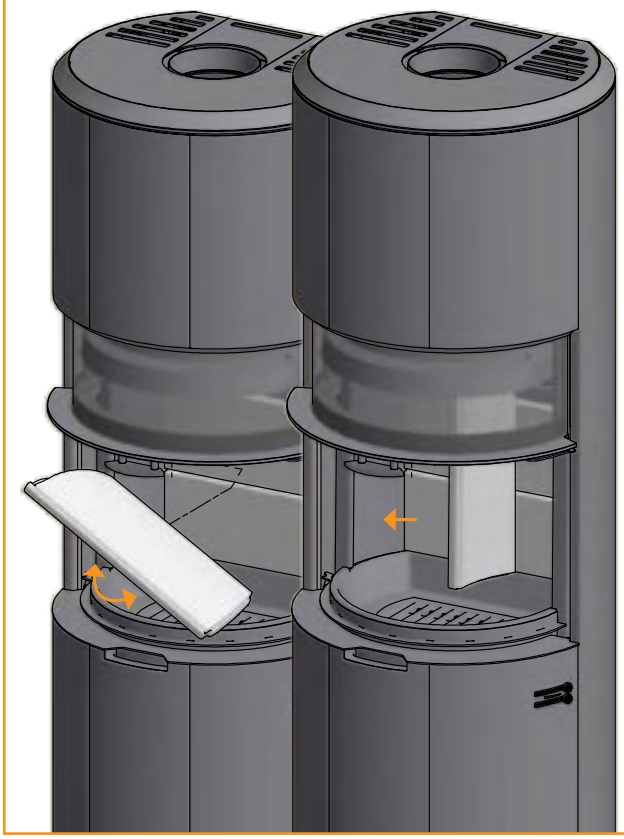

Mount the upper rear plate 6

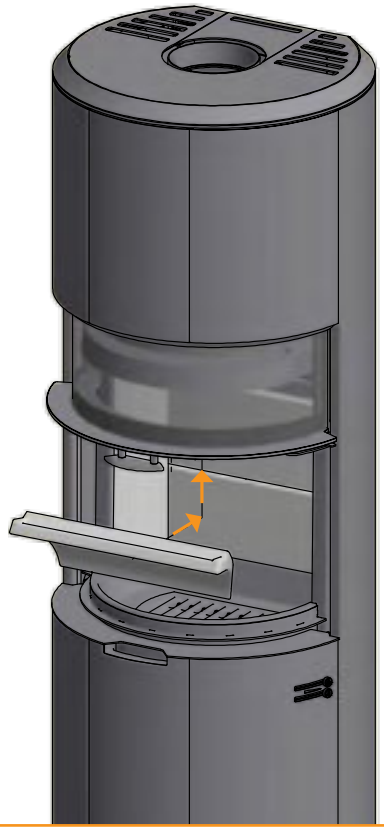

Mount the lower baffle plate. The baffle plate must be supported by the rear plates. 7

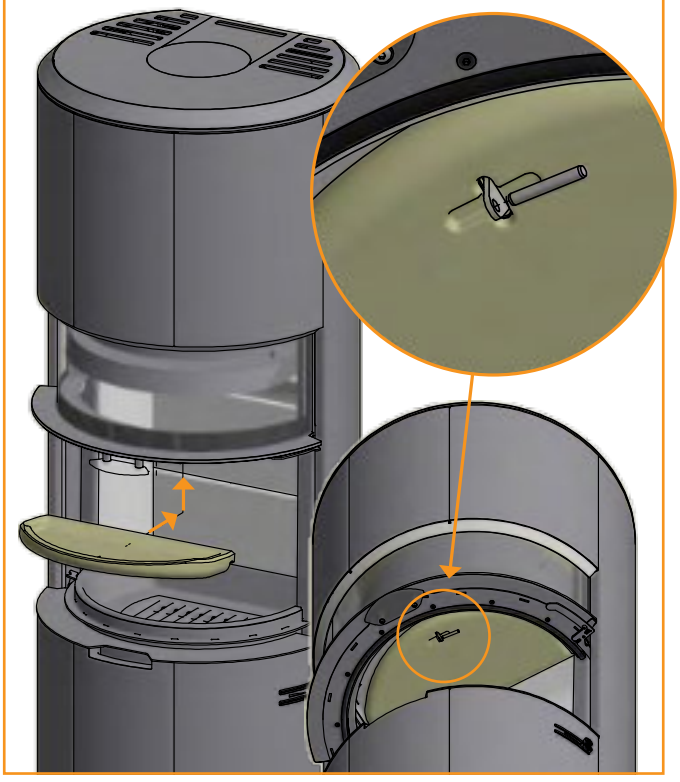

LOAD-BEARING FOUNDATION

Scan 87 weighs 273 kg.

You should of course make sure that the foundation on which the stove is positioned can indeed support the weight of the stove and, where applicable, a steel chimney, if you have opted for this solution. In case of doubt about the carrying capacity of the floor, please consult a building expert.

FLOOR PLATE (ACCESSORY)

If you are placing the stove on a flammable floor, you must comply with the national and local regulations on the size of any non-flammable subsurface required to cover the floor around the stove.

Your local Scan dealer can advise you on regulations concerning protection of flammable materials in the vicinity of your stove.

The floor plate's function is to protect the floor and flammable material against any sparks that may occur. A floor plate can be made of steel or glass, but the stove can also be erected on clinker concrete, natural stone or similar materials.

This Scan wood-burning stove has an integrated floor plate at the bottom and can thus be erected directly on flammable material without the need for further protection underneath the stove.

Small shaped floor plate in glass

Large shaped floor plate in glass

INSTRUCTIONS FOR USE

CB-TECHNOLOGY (CLEAN BURN)

The stove is equipped with CB technology. In order to ensure optimal combustion of gases released during the combustion process, air passes through a specially developed system of channels. The heated air is conducted into the combustion chamber through the holes in the rear lining of the combustion chamber and at the baffle plates. This airflow is controlled by the rate of combustion and cannot therefore be regulated.

NOTE: The wood must never be placed higher than the tertiary holes at the rear of the burn chamber (This does not apply at a cold start).

PRIMARY AIR

The primary air is used when lighting the stove and must be closed after 10-20 minutes, when the fire has caught well. The primary air can be used continuously when using very hard wood.

Settings for normal load: 0 - 30%

SECONDARY AIR

Secondary air is pre-heated and fed indirectly to the fire. At the same time, the secondary airflow cleans the glass pane to avoid soot build-up. If you over-restrict the secondary airflow, soot can build up on the glass pane. The secondary airflow determines the heat output from your wood stove.

Settings for normal load: 50 - 70%

BAFFLE PLATE

The baffle plate is located in the upper part of the combustion chamber. The plate holds back smoke, making sure it stays inside the combustion chamber for a longer time before escaping through the chimney. This reduces the flue gas temperature as the gases have more time to dissipate heat to the stove.

The baffle plate must be removed for sweeping; see “Maintenance”. Note that the baffle plate is made of porous, ceramic material, and is liable to break easily. You should therefore handle it with care.

The baffle plate is subject to wear and tear and not covered by the warranty.

ASH CONTAINER

Open the door and the grate in the bottom of the stove and lift out the ash container.

- The ash container must not be become too full and must therefore be emptied at regular intervals
- Never empty ashes into a flammable container. Ashes can contain glowing embers long after you finish operating the stove

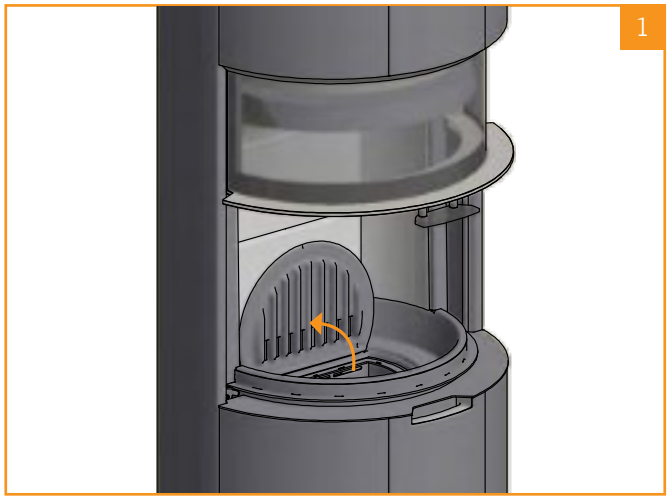
1

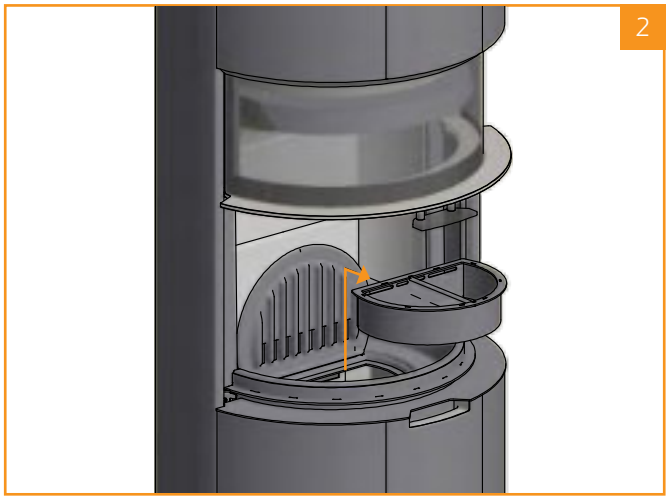
2

Baffle plate

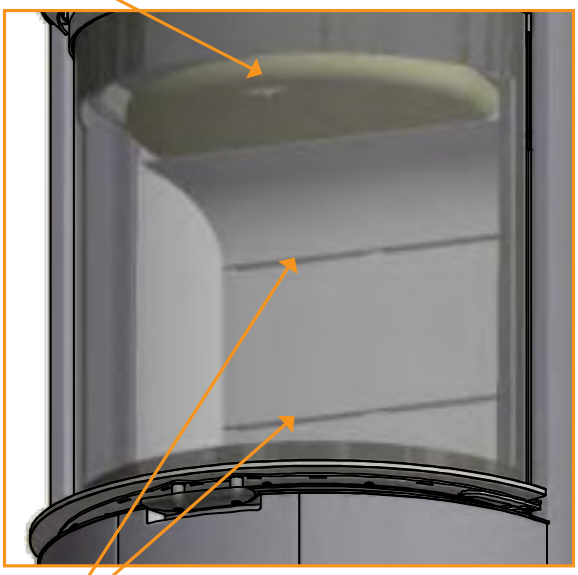

CB-technique

SETTINGS
FOR NORMAL LOAD:

Primary air:	0 - 30%
Secondary air:	50 - 70%

Ash container

Adjustment of air supply,
primary and secondary damper

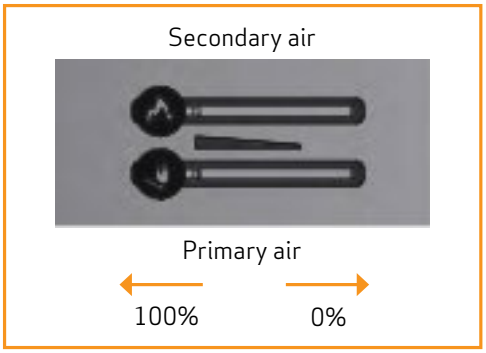

IINSTRUCTIONSFOR HEATING

ENVIRONMENTALLY-FRIENDLY FIRING

Avoid turning down your woodburning-stove to the point where no flames are visible from the wood, as this leads to poor combustion and low efficiency. The gases released from the wood will not be burnt off due to the low temperature in the combustion chamber. Some of the gases will condense in the stove and flue system as soot, and this could lead to your chimney catching fire at a later point. The residual smoke which exits the chimney will pollute the surrounding area and cause an unpleasant smell.

LIGHTING

We recommend the use of fire lighters, or similar products. Using fire lighters helps light the wood more quickly and keeps the combustion process clean.

NOTE: Never use liquid lighting fuels!

The combustion chamber lining may turn black when the fire is lit.
It will burn clear again the next time wood is added.

NOTE!
See our video
about correct firing

"TOP DOWN" LIGHTING

"Top down" lighting is a more environmentally friendly way of lighting the fire and helps to keep the glass area as clean as possible.

Do as follows for a correct "top down" lighting:

- 8 pieces of wood approx. 25-30 cm long with a weight of approx. 0.4-0.6 kg per piece
- 12-20 thin pieces of firewood of about 25 cm in length, with a total weight of approx. 0.8-1,0 kg.
- 3 fire lighters in bag or block form

1. Place the pieces of wood, firewood and fire lighters in the combustion chamber as shown below
2. Set the primary and secondary air controls to maximum in the lighting phase. If the fire is too strong, you may throttle down the primary air damper (at the left)

NOTE: The wood must never be placed higher than the tertiary holes at the rear of the burn chamber (This does not apply at a cold start).

CONTINUOUS OPERATION

It is important to obtain as high a temperature as possible in the combustion chamber. This results in best possible use of the stove and fuel, as well as achieving clean combustion. In this way you will avoid build-up of soot on the combustion chamber lining and glass pane. During operation, you should not see any smoke; just a movement in the air that indicates combustion is in progress.

- After completing the lighting phase, you should have a good layer of embers in the stove; you can then start operation of it properly
- Add 2-3 pieces of wood at a time: they should be about 0,7-0,9 kg in weight and about 27-30 cm long

NOTE: The wood must catch fire quickly. This is why we recommend setting the primary air flow fully open. Operating the stove at too low a temperature and with too little primary air can lead to gases igniting, which can damage the stove.

- When adding wood, always open the glass door carefully to prevent smoke escaping. Keep the door closed during the whole combustion phase
- Never add wood, while the fire is burning nicely

At the EN 16510-test the stove was fired as shown on the picture:

With three pieces of birch each 300 mm – with a total weight of 2.6 kg.

Primary air damper 35 mm open – secondary air damper 35 mm open.

Refuelling interval: 48 min

The criterion for the end of test cycle: 4-4,5 % CO^2

WARNING ABOUT OVER-FIRING

If the stove is continiously fired with larger amounts of wood than recommended and/or receives too much air, this can cause a heavy heat development liable to damage both stove and the surrounding walls. We therefore recommend that you always observe the max. recommended amount of fuel (See under "Technical Data").

USING THE STOVE IN VARIOUS WEATHER CONDITIONS

The way the wind affects the chimney can have a big impact on how your stove reacts under various wind loads; you may need to adjust the airflow to achieve good combustion. Fitting a damper in the flue pipe may also help, as it will allow you to regulate the draught under changing wind loads. The damper must not close more than 80% of the flue pipe.

Fog and mist can also have a big impact on chimney draught; you may need to use other settings for the combustion air to achieve good combustion.

FIRING IN THE SPRING OR AUTUMN

In the spring/autumn transition period, where there is less need for heating, we recommend you light the stove "top down" once, perhaps adding just two pieces of wood as above to ensure that the combustion chamber lining burns clean again.

THE FUNCTION OF THE CHIMNEY

The chimney is the wood-burning stove's motor; its performance determines how well your stove will work. The draught in the chimney creates negative pressure in the wood-burning stove. The negative pressure draws the smoke out of the stove and takes in air through the combustion air damper to fuel the combustion process. Combustion air is also used for the air wash system that keeps the window clear of soot.

The draught in the chimney is created by the difference in temperature inside and outside the chimney. The higher temperature difference, the better draught. This is why it is important that the chimney reaches operating temperature before you reduce the damper settings to restrict combustion in the stove (a brickwork chimney will take longer to reach operating temperature than a steel chimney). It is very important that the operating temperature is reached as quickly as possible on days when the draught in the chimney is poor due to unfavorable wind and weather conditions. You need to get a few flames going as quickly as possible. Chop the wood extra thin; use an extra fire lighter etc.

- After longer periods without use, you must check the chimney flue for blockages
- You can connect several units to the same chimney. You should however first check the relevant regulations in this respect

CHIMNEY FIRE

In the event of a chimney fire, keep the stove door, the ash container, and all dampers on the stove closed. In an emergency, call the fire service.

- We recommend that you get a chimney sweep to check the chimney before using the stove again

GENERAL NOTES

PLEASE NOTE! Parts of the wood-burning stove, especially the outer surfaces, become hot during use. Due care should be exercised.

- Wear a glove when handling the stove
- Never empty ashes into a flammable container. Ashes can contain glowing embers long after you finish operating the stove
- Keep the combustion chamber closed except during ignition, refuelling and removal of residue material to prevent fume spillage
- Keep the air intake and output holes free from any accidental blokage while the stove is in use
- When the stove is not in use you can close the dampers to avoid a draught through the stove
- If the stove has not been used for some time, you should check the flue passageways for potential blockages before relighting
- We advise you strongly not to use the stove over night. The stove is not suited for this purpose

NOTE: Never place flammable material in the radiation zone of the stove!

HANDLING OF THE FUEL

SELECTING WOOD/FUEL

You can use any type of wood as fuel. However harder woods, such as beech or ash, are generally better for heating, as they burn more evenly and create less ash. Other woods, such as maple, birch and spruce, are excellent alternatives.

PREPARATION

The best fuel is obtained where the tree has been felled and the wood sawn and split before May 1st. Remember to cut the wood to match the size of the combustion chamber. We recommend a diameter of 6-10 cm. The length should be about 6 cm shorter than that of the combustion chamber to leave enough space for air to circulate. If the diameter of the wood is greater than the above, it should be split down its length. Wood that has been split dries faster.

STORING

You need to store the sawn and split wood in a dry place for 1-2 years before it will be dry enough to burn. Wood dries faster if you stack it in an airy place. Before using it, it is a good idea to store the wood for a few days at room temperature. Remember that wood absorbs moisture from the air during autumn and winter.

MOISTURE

To avoid problematic impact on the environment and to ensure optimum operating economy, the wood should be perfectly dry before it can be used as fuel. If you use wood that is too damp, most of the heat it produces will be used up in evaporating the water. The stove will accordingly not increase in temperature, nor emit heat to the room as a result. This is obviously poor economy, and it will cause soot build-up on the glass pane, in the stove and in the chimney. Operation using moist wood also pollutes the environment.

- Maximum wood moisture content should not exceed 20%. A moisture content of 15-18% will deliver best efficiency
- An easy way of checking wood moisture content is to knock the ends of the two pieces of wood together. If the wood is moist, the sound will be slightly muffled
- It is a good idea to take the wood into the house a day before it is to be used

USE OF THE FOLLOWING AS FUEL IS ILLEGAL

NOTE: It is absolutely prohibited to fire with painted, pressure impregnated or glued wood, or sea driftwood.

NOTE: Never use gasoline, gasoline-type lantern fuel, kerosene, charcoal lighter fluid, ethyl alcohol or similar liquids to start or "reignite" a fire in the stove. Keep all such liquids well away from the stove while it is in use.

NOTE: Nor should you ever burn chipboard, plastics, waste or treated paper. These contain substances that are hazardous to human health, to the environment, your stove, and your chimney.

In short - make sure you only use proper wood.

CALORIFIC VALUE OF THE WOOD

The various woods have different calorific values. In other words, for certain species of wood, you will need to use a greater quantity to achieve the same heating performance. This Instuction Manual assumes that you will be using beach, which has a very high calorific value and is also the easiest wood to get hold on. If you use oak or beech as fuel, you need to bear in mind that these wood types have a greater calorific value than for example birch. To avoid any risk of damage to the stove, you should therefore make sure to use less fuel in these cases.

Wood types	kg Drywood/m^3	Compared to beech
Hornbeam	640	110%
Beech/Oak	580	100%
Ash	570	98%
Maple	540	93%
Birch	510	88%
Pine	480	83%
Fir	390	67%
Poplar	380	65%

MAINTAINANCE

SWEEPING THE CHIMNEY AND CLEANING THE STOVE

Follow national and local regulations for sweeping the chimney. We recommend having the stove cleaned regularly by a chimney sweep.

Before cleaning the stove and sweeping the flue pipe and chimney, we recommend removing the baffle plates.
(See section "Removal of baffle plates and combustion lining")

NOTE: All service and reparation must be done, when the stove is cold.

CHECKING THE STOVE

Scan A/S recommends that you check your stove thoroughly after sweeping/cleaning. Check all visible surfaces for cracks. Check that all joints are tight and that the gaskets are correctly seated. Worn or deformed gaskets should be replaced.

SERVICING

We recommend that the stove is thoroughly serviced at least every two years by a qualified fitter. Remember only to use original spare parts.

The service should include the following:

- Check the gaskets. Replace any that are broken or have turned hart
- Check the combustion chamber lining and the grate
- Check heat-insulating materials
- Check the locking device and lubricate the 2 pins on the door using copper grease

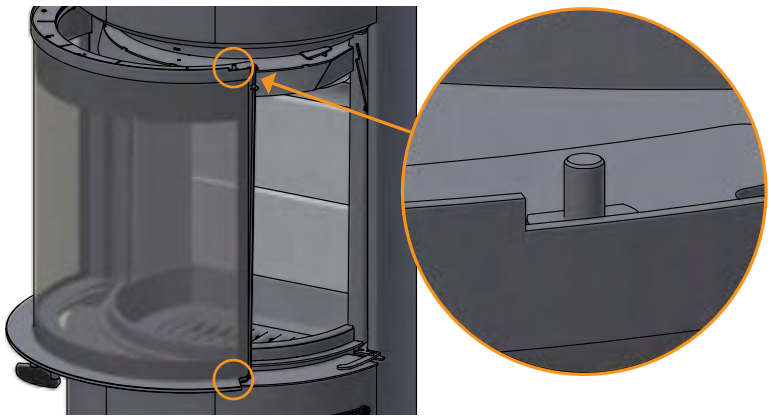

- Under no circumstances should columns for the vertical movement of the door be lubricated!!

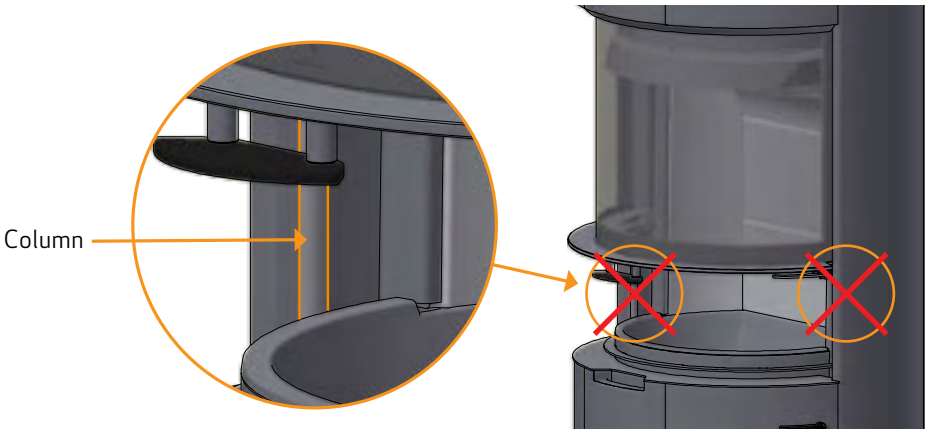

COMBUSTION CHAMBER LINING

Slight cracks can appear in the combustion chamber lining due to moisture or sudden heating/cooling. These cracks have no influence on the output or lifetime of your stove. However,if the lining starts to crumble and fall out, you must replace it.

The combustion chamber lining is not covered by the warranty.

GASKETS

All wood-burning stoves have seals made of ceramic material fitted to the stove, the door and/or the glass. These seals are subject to wear and tear and must be replaced when necessary.

Gaskets are not covered by the warranty.

PAINTED SURFACES

Clean your wood-burning stove by wiping it down with a dry, lint-free cloth.

If the paint finish gets damaged, you can purchase repair paint in spray form from your Scan dealer. As slight differences in colour shade are possible, we recommend you spray a larger area to achieve a natural blend. For best results, apply repair spray when the stove is warm, but it should preferably not be scalding hot.

NOTE: Make sure to air the room thoroughly after applying spray paint.

REMOVAL OF BAFFLE PLATES AND COMBUSTION CHAMBER LINING

Be very careful when removing the baffle plates from the stove.

- Lift up the lower baffle plate, remove the pin and take out the baffle plate
- Lift the upper baffle plate to the back of the combustion chamber, remove the pin and and remove it
- Carefully lift the rear plates and sides of the combustion chamber lining out of the stove.
  Please note that the sides support the rear plates and that these may fall over, when the sides are taken out

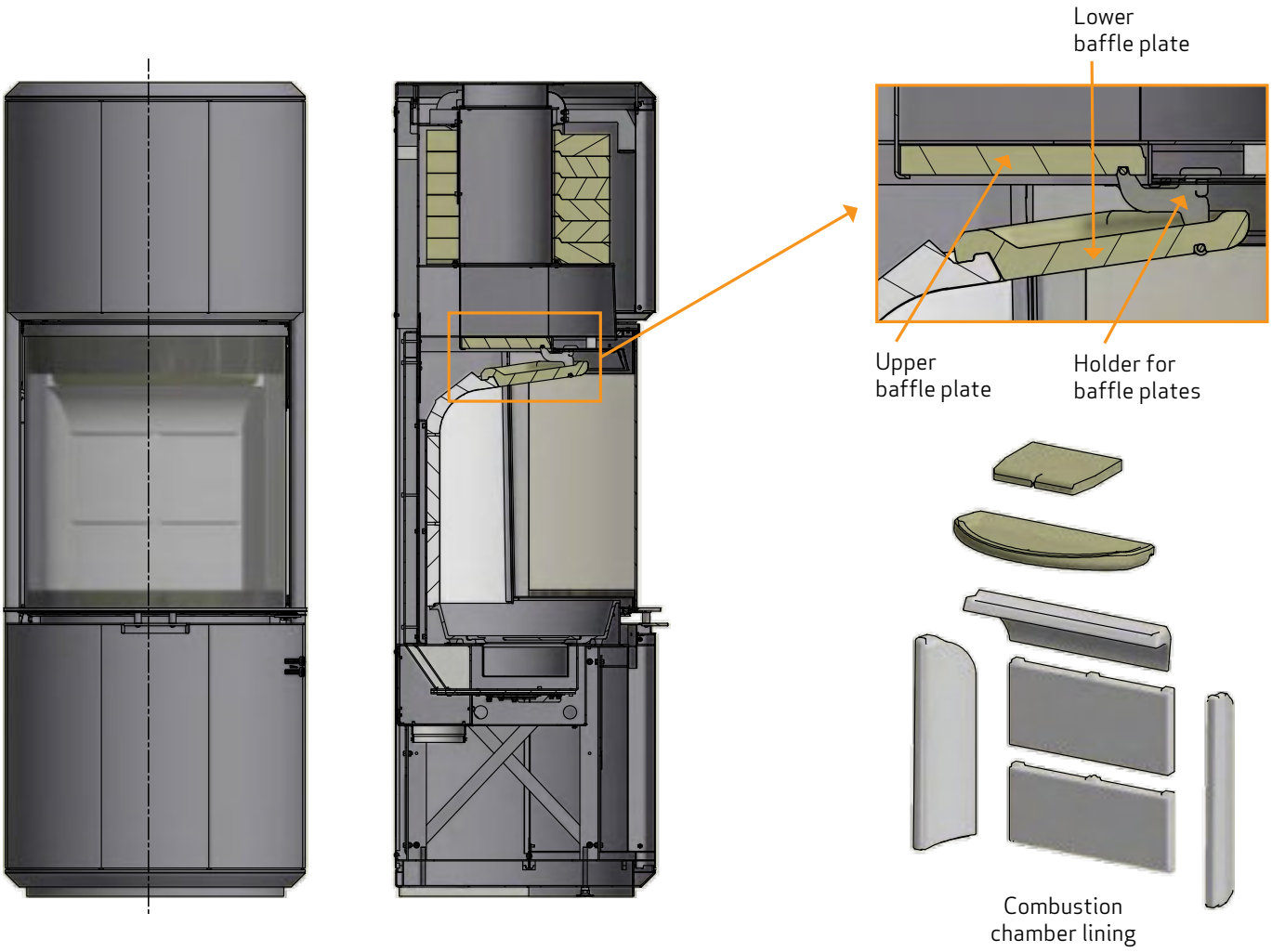

DISPOSAL OF STOVE PARTS

Steel/cast iron	Send for recycling
Glass	Dispose of as ceramic waste
Combustion chamber lining	Ceramic stone is not recyclable. Dispose of as waste
Baffle plate	Vermiculite is not recyclable. Dispose of as waste
Gaskets	Dispose of as waste

CLEANING THE GLASS

Our wood-burning stoves are designed to prevent serious soot build-up on the glass. The best way to achieve this is to make sure you have a good supply of combustion air. It is also very important that the wood is dry and the chimney correctly dimensioned.

Even if you operate the stove in accordance with our instructions, a slight film of soot may still accumulate on the glass. You can easily remove this film by wiping the glass down with a dry cloth and then with a cloth dampened with glass cleaner.

- Please note that the glass cleaner is not to get into contact with the gaskets, as this can discolour the glass permanently
- The glass cleaner must not come into contact with the painted surfaces, as these can be damaged

In order to be able to clean the glass at the inside, the door must be opened laterally:

1 Pull up the door and then push the door stop at the left side to the left

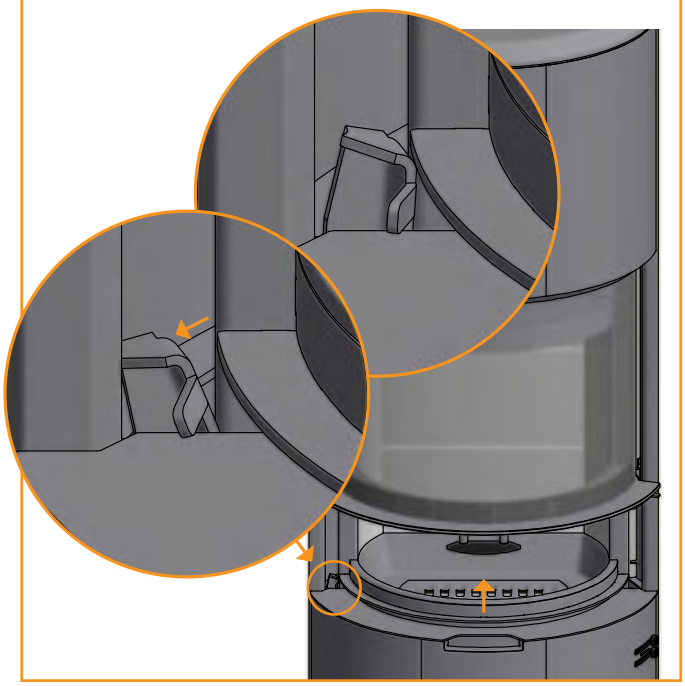

2 Pull down the door and then push forward the safety device for the handle at the right side

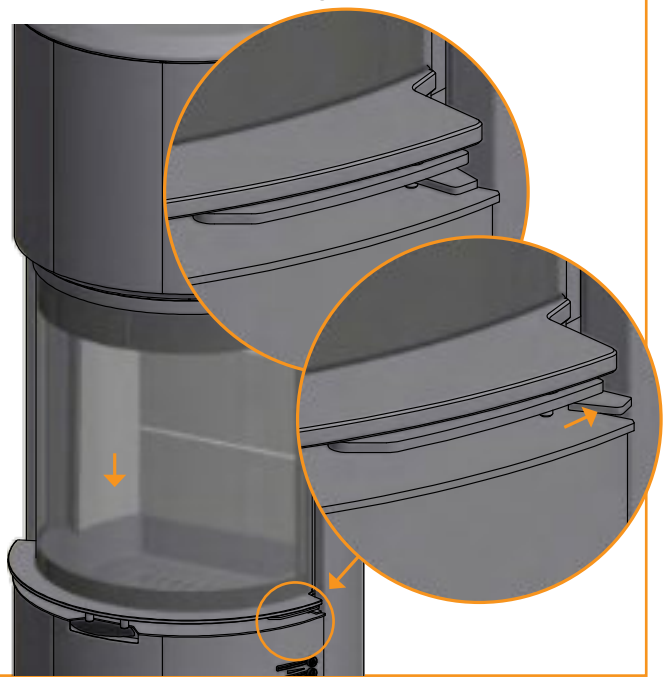

3 Pull out the handle, and the door can now be opened and cleaned on the inside of the glass. Remember to remount the door in reverse order.

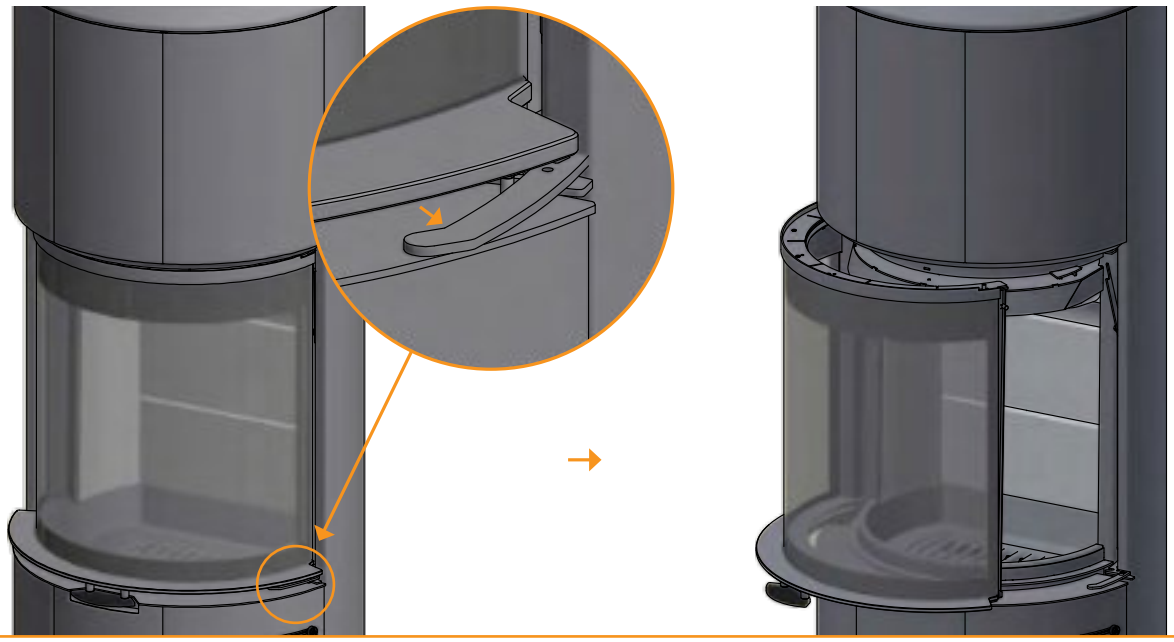

IMPORTANT! Give the handle an extra push so that it is positioned correctly!

4

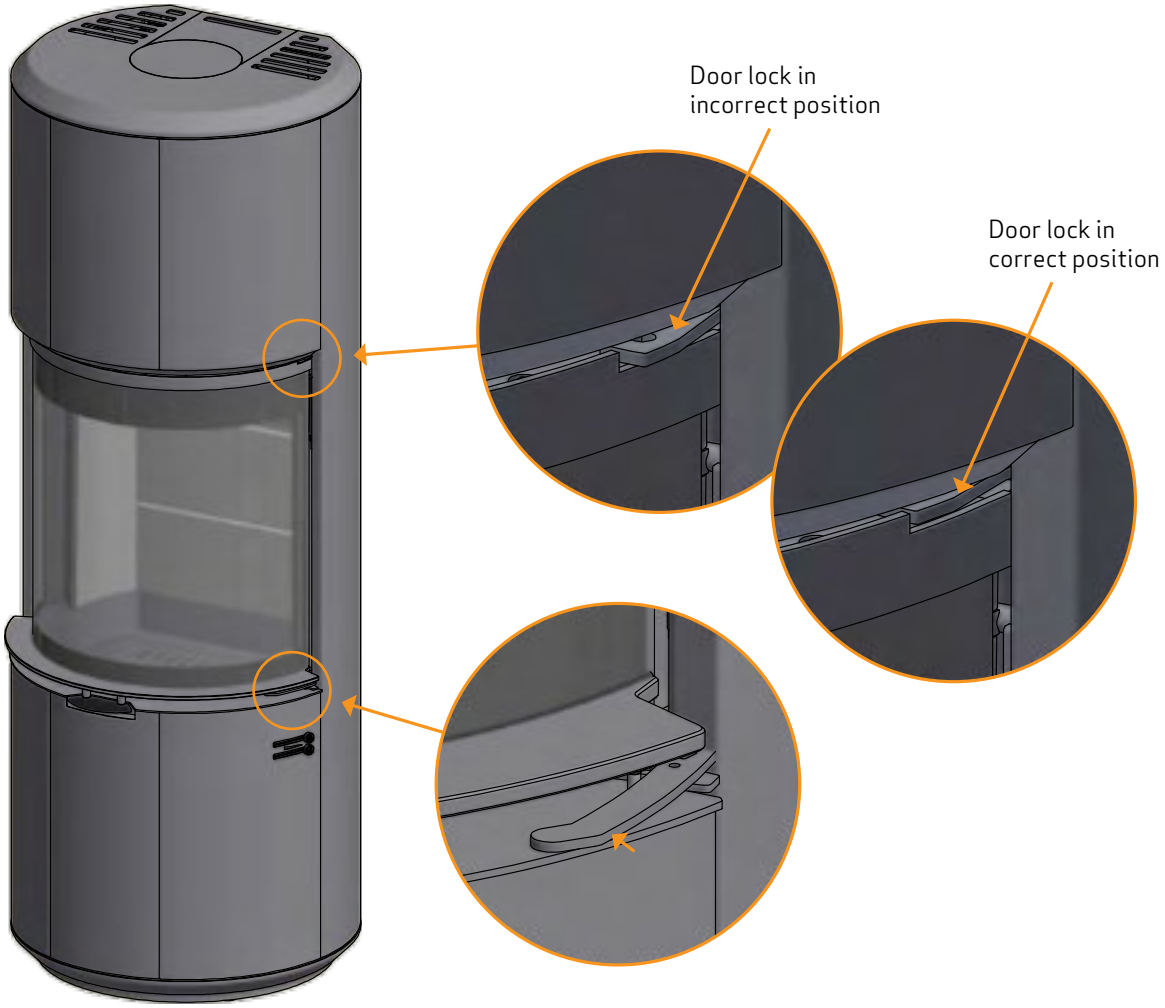

TROUBLESHOOTING

SMOKE ESCAPING

- Damp wood
- Chimney is not properly dimensioned for the stove
- Is the chimney the right height for its surroundings?
- At rear outlet, check that the flue pipe does not obstruct the chimney draught
- Chimney not drawing properly
- Check if the smoke gas pipe/chimney are blocked
- Vacuum in room
- The door is opened before the embers have burned down sufficiently

WOOD BURNING TOO QUICKLY

- The air valves are set incorrectly
- Inferior firewood (waste wood, pallets etc.)
- The baffle plates is incorrectly mounted or missing
- Chimney too large

SOOT BUILD-UP ON GLASS

- Incorrect secondary airflow setting
- Damp wood
- Inferior firewood (waste wood, pallets etc.)
- Vacuum in room
- Excessive primary air
- Wood pieces too large on lighting
- Chimney not drawing sufficiently

WHITE SHADOW ON THE INSIDE OF THE GLASS

- Over-firing (See "Instructions for heating")
- Vacuum in the room
- Too much primary air

EXCESSIVE SOOT BUILD-UP IN CHIMNEY

- Poor burning (more air required)
- Damp wood

THE SURFACE OF THE STOVE IS TURNING GREY

- Overheating (see instructions for heating)

POOR HEATING PERFORMANCE OF STOVE

- Damp wood
- Inferior wood quality with low fuel value
- Not enough wood
- Baffle plates are not fitted correctly

SMELL AND SOUND OF THE STOVE

- The lacquer on the stove hardens when you use the stove for the first time; this can cause an odour. Open a window or a door for ventilation, and make sure the stove is heated up sufficiently to avoid odours later
- When heating up and cooling down, the stove may make some clicking noises. These are due to the huge temperature differences to which the material is exposed and do not indicate any product defects

DOOR LIFTER OUT OF POSITION

When the door is turned out in horizontal position it is possible to push the door lifter out of correct position. This will cause that the door cannot be closed correctly.

Swing the door out to fully open position.

If this is not possible, it will help to lift the door a little in right side. Afterwards swing the door lifter out in correct position. The door can now be closed.

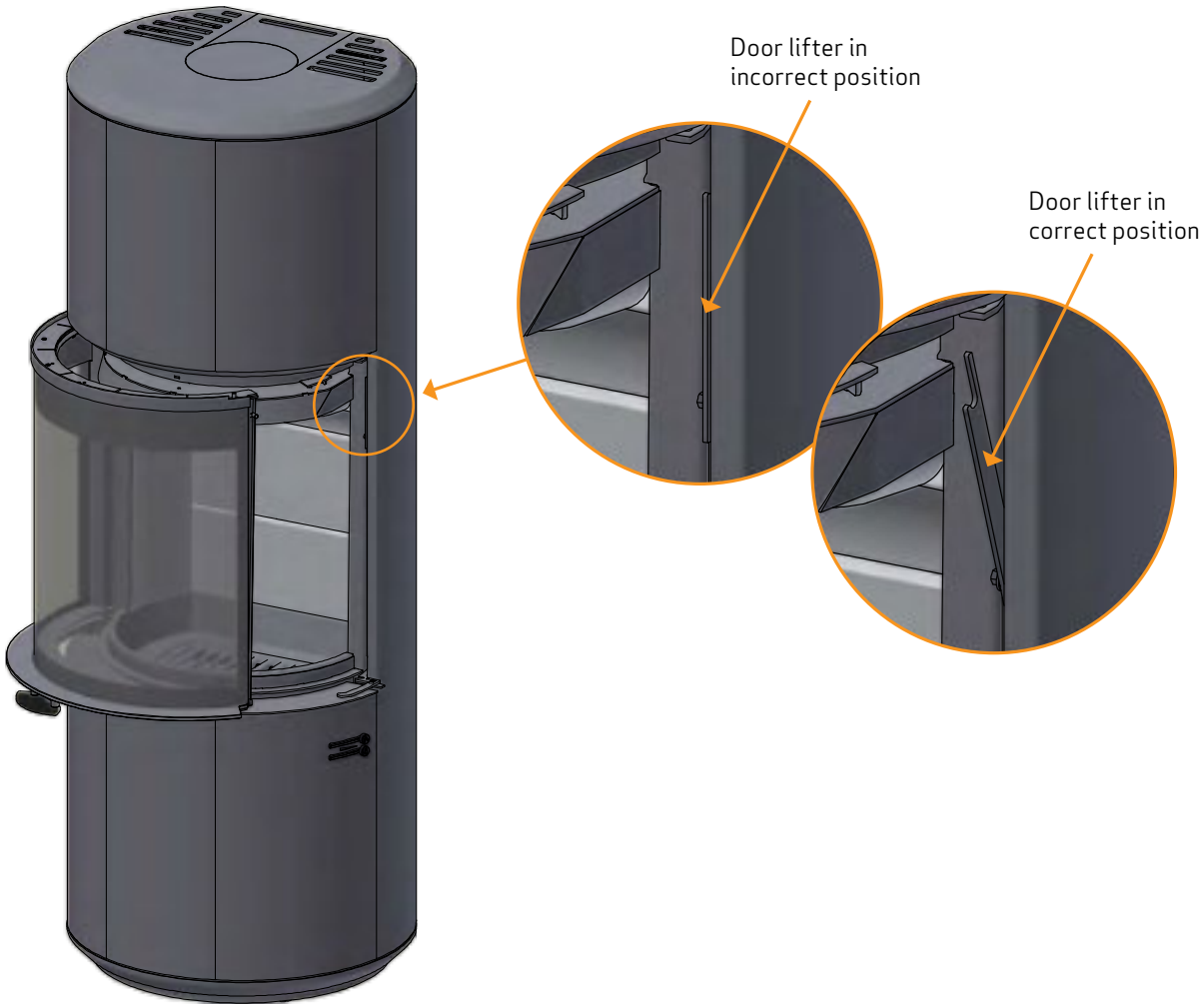

LOCKED HANDLE IN HORIZONTAL DOOR POSITION

To turn the door out in horizontal position, the handle in right side must be opened and stay in open position until the door is back in position again. When cleaning the glass inside it is possible to push the handle back to closed position with open door. This will release the counterweight inside the stove and the handle will rise approximately 70 mm.

This can be fixed by pushing the handle down and take the handle out in open position again.

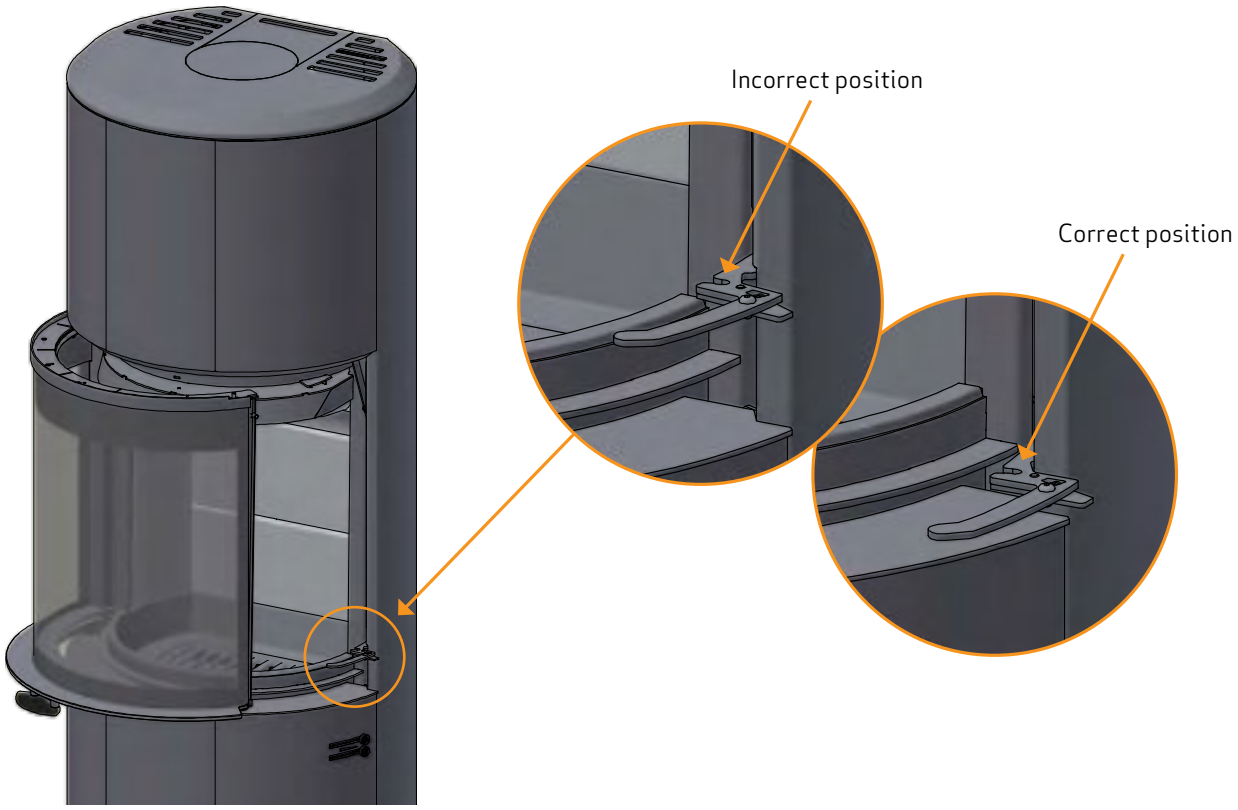

Press the handle down 1

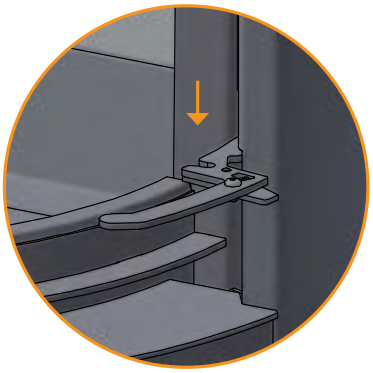

Turn towards open position and rise app. 8 mm. 2

The handle will now go out in open position

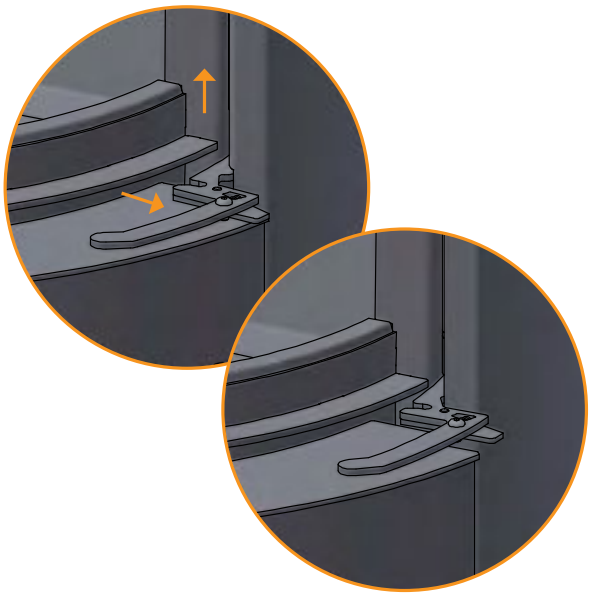

WARRANTY

All wood-fired Scan products are made of high-quality materials and subject to strict quality controls before leaving the factory. We give a warranty of 5 years on manufacturing errors or defects.

You must quote your stove's product registration number when you contact us or your authorized Scan dealer with a warranty claim.

The warranty covers all parts which in the opinion of Scan A/S require repair or replacement due to manufacturing or construction error

The warranty applies to the original purchaser of the product only, and is not transferable (except on prior sale).

The warranty covers only damage caused by manufacturing or construction errors.

THE FOLLOWING PARTS ARE NOT COVERED BY THE WARRANTY

- Wear and tear parts, such as the combustion chamber liners, baffle plates, riddling grate, glass, and seals (except for defects which were present on delivery)
- Defects caused by external chemical and physical influences during transportation, storage and assembly, or at a later time.
- Soot build-up caused by poor chimney draught, damp wood, or improper use
- Costs of additional heating in connection with a repair
- Transport costs
- Costs for setting up, removing the wood stove

THIS WARRANTY IS VOID

- In case of incorrect installation (the installer is responsible for observing and complying with legal requirements and local bylaws, along with this Instructions manual for the wood-burning stove and accessories)
- In case of improper use, and/or use of prohibited fuels, non-original spares (see this instructions manual)
- If the product registration number of the stove has been removed or damaged
- In case of repairs that do not comply with our instructions or instructions by an authorized Scan dealer
- In case of any manipulation of the original state of this Scan product or its accessories. Any unauthorized modification of the stove may not be carried out
- This warranty is only valid in the country to which this Scan product was originally supplied

Always use original replacement parts, or parts recommended by the manufacturer.

NOTES

Product registration number

Quote this number at all enquiries

Edition:
UK 90087500
10061693-P05
03.06.2025